Version 2

December 2004

L-ACOUSTICS XT LINE

112XT, 115XT, 115XT HiQ

OPERATOR MANUAL

FOREWORD

Thank you for purchasing the 112XT, 115XT or 115XT HiQ sound reinforcement system.

This manual is intended to provide you with the information you require to effectively install and operate your XT loudspeaker enclosure in a wide variety of professional sound reinforcement applications.

Specific information and recommendations are included regarding system design, sound design and installation. We are confident that the information provided in this manual will be sufficient for most applications, however, should you require further assistance your distributor or L-ACOUSTICS® are available to provide additional technical support.

MANUAL ORGANIZATION

- The Introduction gives a brief presentation of coaxial technology and the XT system.
- Chapter 1 introduces the 112XT, 115XT and 115XT HiQ loudspeakers plus accessories
- Chapter 2 discusses 112XT, 115XT and 115XT HiQ power amplification and cabling
- Chapter 3 describes preset selection and system operation
- Chapter 4 discusses sound design aspects
- Chapter 5 describes 112XT, 115XT and 115XT HiQ installation procedures
- Chapter 6 discusses XT system operation and maintenance procedures
- Chapter 7 provides detailed 112XT, 115XT and 115XT HiQ specifications

TABLE OF CONTENTS

FOREWORD **1**

MANUAL ORGANIZATION **1**

TABLE OF CONTENTS **3**

TABLE OF CONTENTS **3**

LIST OF FIGURES **4**

LIST OF TABLES **6**

0. INTRODUCTION **7**

1. THE XT system **8**

1.1 XT SYSTEM COMPONENTS *8*

1.2 XT overview *12*

1.3 112XT SPECIFICATIONS *13*

1.4 115XT SPECIFICATIONS *14*

1.5 115XT HiQ SPECIFICATIONS *15*

2. POWERING XT ENCLOSURES **16**

2.1 CONNECTORS and CABLES *16*

2.2 POWERING 112XT *17*

2.3 POWERING 115XT *18*

2.4 POWERING 115XT HiQ *19*

3. XT CONTROL AND PROCESSING **21**

3.1 General Description of XT Presets *21*

3.2 XT Preset Policy *22*

3.3 Guidelines Regarding System Protection *23*

3.4 XT PRESET libraries *24*

4. SOUND DESIGN **31**

4.1 APPLICATIONS *31*

4.2 aiming xt enclosures *32*

4.3 DISTRIBUTED SOUND REINFORCEMENT *33*

4.4 PREDICTING XT COVERAGE *34*

4.5 XT COVERAGE MODELING USING SOUNDVISION *34*

4.6 DISTRIBUTED SOUND REINFORCEMENT *39*

4.6.1 OVERHEAD DISTRIBUTED SYSTEMS 39

4.6.2 DELAY SYSTEMS 39

4.6.3 COMPLEMENTARY FILL 40
4.7 front-of-house (FOH) applications *42*
4.8 stage MONITORING *43*
4.9 Using XT with Subwoofers *45*
4.9.1 Combining XT With Subwoofers 46
4.9.2 Ground Stacked Systems 46
4.9.3 Separate Flown XT Array with Ground Stacked Subwoofers 46
5. INSTALLATION PROCEDURES 48
5.1 etr112xt, etr115xt u-bracket attachment *48*
5.2 cpl112xt, cpl115xt coupling adapter bar attachment *49*
5.3 XTLIFTbar attachment *51*
5.4 SAFETY RULES *51*
6. XT SYSTEM OPERATION 52
6.1 RECOMMENDED MAINTENANCE PROCEDURES *52*
6.2 SPARE PARTS *53*
7. SPECIFICATIONS 54
7.1 112XT ELEMENT SPECIFICATIONS *54*
7.2 115XT ELEMENT SPECIFICATIONS *58*
7.3 115XT HiQ ELEMENT SPECIFICATIONS *62*

LIST OF FIGURES

ERREUR ! AUCUNE ENTRÉE DE TABLE D'ILLUSTRATION N'A ÉTÉ TROUVÉE.

LIST OF TABLES

Table 1: Maximum Recommended Length for Damping Factor > 20 16
Table 2: Load and Power Ratings for 112XT 17
Table 3: Recommended power amplification and MLS switch settings for 112XT low section 17
Table 4: Recommended power amplification and MLS switch settings for 112XT high section 17
Table 5: Recommended MLS switch settings for powering 112XT 17
Table 6: Load and Power Ratings for 115XT 18
Table 7: Recommended power amplification and MLS switch settings for 115XT low section 18
Table 8: Recommended power amplification and MLS switch settings for 115XT high section 18
Table 9: Recommended MLS switch settings for powering 115XT 18
Table 10: Load and Power Ratings for 115XT HiQ 19
Table 11: Recommended power amplification and MLS switch settings for 115XT HiQ low section 19
Table 12: Recommended power amplification and MLS switch settings for 115XT HiQ high section 19
Table 13: Recommended MLS switch settings for powering 115XT HiQ 19
Table 14: Output Power Ratings and MLS Switch Settings for L-ACOUSTICS LAa Amplifiers 20

L-ACOUSTICS V7.2 PRESETS for BSS 334 MINIDRIVE

PRESET NAME	PGM TYPE	MEM	OUT 1 (Source)	OUT 2 (Source)	OUT 3 (Source)	OUT 4 (Source)
ARCS 2W LO	2-way stereo	1	ARCS LO (A)	ARCS LO (B)	ARCS HI (A)	ARCS HI (B)
ARCS 2W HI	2-way stereo	2	ARCS LO (A)	ARCS LO (B)	ARCS HI (A)	ARCS HI (B)
A 3W 118 LO	3-way (A) + SUB (B)	3	SB118 (A)	ARCS LO (A)	ARCS HI (A)	SB118 (B)
A 3W 118 HI	3-way (A) + SUB (B)	4	SB118 (A)	ARCS LO (A)	ARCS HI (A)	SB118 (B)
A 3WX 118 L	3-way (A) + SUB (B)	5	SB118 (A)	ARCS LO (A)	ARCS HI (A)	SB118 (B)
A 3WX 118 H	3-way (A) + SUB (B)	6	SB118 (A)	ARCS LO (A)	ARCS HI (A)	SB118 (B)
A 3W 218 LO	3-way (A) + SUB (B)	7	SB218 (A)	ARCS LO (A)	ARCS HI (A)	SB218 (B)
A 3W 218 HI	3-way (A) + SUB (B)	8	SB218 (A)	ARCS LO (A)	ARCS HI (A)	SB218 (B)
A 3WX 218 L	3-way (A) + SUB (B)	9	SB218 (A)	ARCS LO (A)	ARCS HI (A)	SB218 (B)
A 3WX 218 H	3-way (A) + SUB (B)	10	SB218 (A)	ARCS LO (A)	ARCS HI (A)	SB218 (B)
A 3W DVS LO	3-way (A) + SUB (B)	11	dV-SUB (A)	ARCS LO (A)	ARCS HI (A)	dV-SUB (B)
A 3W DVS HI	3-way (A) + SUB (B)	12	dV-SUB (A)	ARCS LO (A)	ARCS HI (A)	dV-SUB (B)
A 3WX DVS L	3-way (A) + SUB (B)	13	dV-SUB (A)	ARCS LO (A)	ARCS HI (A)	dV-SUB (B)
A 3WX DVS H	3-way (A) + SUB (B)	14	dV-SUB (A)	ARCS LO (A)	ARCS HI (A)	dV-SUB (B)
112XT FIL	2-way stereo	15	112XT LO (A)	112XT LO (B)	112XT HI (A)	112XT HI (B)
112XT FOH	2-way stereo	16	112XT LO (A)	112XT LO (B)	112XT HI (A)	112XT HI (B)
112XT MON	2-way stereo (not linked)	17	112XT LO (A)	112XT LO (B)	112XT HI (A)	112XT HI (B)
112 SB115	3-way (A) + SUB (B)	18	SB115 (A)	112XT LO (A)	112XT HI (A)	SB115 (B)
112 X 115	3-way (A) + SUB (B)	19	SB115 (A)	112XT LO (A)	112XT HI (A)	SB115 (B)
112 SB118	3-way (A) + SUB (B)	20	SB118 (A)	112XT LO (A)	112XT HI (A)	SB118 (B)
112 X 118	3-way (A) + SUB (B)	21	SB118 (A)	112XT LO (A)	112XT HI (A)	SB118 (B)
112 SB218	3-way (A) + SUB (B)	22	SB218 (A)	112XT LO (A)	112XT HI (A)	SB218 (B)
112 X 218	3-way (A) + SUB (B)	23	SB218 (A)	112XT LO (A)	112XT HI (A)	SB218 (B)
112 DVSUB	3-way (A) + SUB (B)	24	dV-SUB (A)	112XT LO (A)	112XT HI (A)	dV-SUB (B)
112 X dVS	3-way (A) + SUB (B)	25	dV-SUB (A)	112XT LO (A)	112XT HI (A)	dV-SUB (B)
115XT FIL	2-way stereo	26	115XT LO (A)	115XT LO (B)	115XT HI (A)	115XT HI (B)
115XT FOH	2-way stereo	27	115XT LO (A)	115XT LO (B)	115XT HI (A)	115XT HI (B)
115XT MON	2-way stereo (not linked)	28	115XT LO (A)	115XT LO (B)	115XT HI (A)	115XT HI (B)
115 SB115	3-way (A) + SUB (B)	29	SB115 (A)	115XT LO (A)	115XT HI (A)	SB115 (B)
115 X 115	3-way (A) + SUB (B)	30	SB115 (A)	115XT LO (A)	115XT HI (A)	SB115 (B)
115 SB118	3-way (A) + SUB (B)	31	SB118 (A)	115XT LO (A)	115XT HI (A)	SB118 (B)
115 X 118	3-way (A) + SUB (B)	32	SB118 (A)	115XT LO (A)	115XT HI (A)	SB118 (B)
115 SB218	3-way (A) + SUB (B)	33	SB218 (A)	115XT LO (A)	115XT HI (A)	SB218 (B)
115 X 218	3-way (A) + SUB (B)	34	SB218 (A)	115XT LO (A)	115XT HI (A)	SB218 (B)
115 DVSUB	3-way (A) + SUB (B)	35	dV-SUB (A)	115XT LO (A)	115XT HI (A)	dV-SUB (B)
115 X dVS	3-way (A) + SUB (B)	36	dV-SUB (A)	115XT LO (A)	115XT HI (A)	dV-SUB (B)
HiQ FILL	2-way stereo	37	115XT HiQ LO (A)	115XT HiQ LO (B)	115XT HiQ HI (A)	115XT HiQ HI (B)
HiQ FOH	2-way stereo	38	115XT HiQ LO (A)	115XT HiQ LO (B)	115XT HiQ HI (A)	115XT HiQ HI (B)
HiQ MON	2-way stereo (not linked)	39	115XT HiQ LO (A)	115XT HiQ LO (B)	115XT HiQ HI (A)	115XT HiQ HI (B)
115FM 2W	2-way stereo (not linked)	40	115FM LO (A)	115FM LO (B)	115FM HI (A)	115FM HI (B)
115FM 2WX	2-way stereo (not linked)	41	115FM LO (A)	115FM LO (B)	115FM HI (A)	115FM HI (B)
FM SB115	3-way (A) + SUB (B)	42	SB115 (A)	115FM LO (A)	115FM HI (A)	SB115 (B)
FM SB118	3-way (A) + SUB (B)	43	SB118 (A)	115FM LO (A)	115FM HI (A)	SB118 (B)
FM SB218	3-way (A) + SUB (B)	44	SB218 (A)	115FM LO (A)	115FM HI (A)	SB218 (B)
FM dVSUB	3-way (A) + SUB (B)	45	dV-SUB (A)	115FM LO (A)	115FM HI (A)	dV-SUB (B)

..... 27

L-ACOUSTICS V7.2 PRESETS for BSS 336 MINIDRIVE

PRESET NAME	PGM TYPE	Mem	OUT 1 (Source)	OUT 2 (Source)	OUT 3 (Source)	OUT 4 (Source)	OUT 5 (Source)	OUT 6 (Source)
ARCS 2W LO	3(A)+3(B)	1	FULL (A)	FULL (B)	ARCS LOW (A)	ARCS LOW (B)	ARCS HI (A)	ARCS HI (B)
ARCS 2W HI	3(A)+3(B)	2	FULL (A)	FULL (B)	ARCS LOW (A)	ARCS LOW (B)	ARCS HI (A)	ARCS HI (B)
A 3W 118 LO	3(A)+3(B)	3	SB118 (A)	SB118 (B)	ARCS LOW (A)	ARCS LOW (B)	ARCS HI (A)	ARCS HI (B)
A 3W 118 HI	3(A)+3(B)	4	SB118 (A)	SB118 (B)	ARCS LOW (A)	ARCS LOW (B)	ARCS HI (A)	ARCS HI (B)
A 3WX 118 L	3(A)+3(B)	5	SB118 (A)	SB118 (B)	ARCS LOW (A)	ARCS LOW (B)	ARCS HI (A)	ARCS HI (B)
A 3WX 118 H	3(A)+3(B)	6	SB118 (A)	SB118 (B)	ARCS LOW (A)	ARCS LOW (B)	ARCS HI (A)	ARCS HI (B)
A 3W 218 LO	3(A)+3(B)	7	SB218 (A)	SB218 (B)	ARCS LOW (A)	ARCS LOW (B)	ARCS HI (A)	ARCS HI (B)
A 3W 218 HI	3(A)+3(B)	8	SB218 (A)	SB218 (B)	ARCS LOW (A)	ARCS LOW (B)	ARCS HI (A)	ARCS HI (B)
A 3WX 218 L	3(A)+3(B)	9	SB218 (A)	SB218 (B)	ARCS LOW (A)	ARCS LOW (B)	ARCS HI (A)	ARCS HI (B)
A 3WX 218 H	3(A)+3(B)	10	SB218 (A)	SB218 (B)	ARCS LOW (A)	ARCS LOW (B)	ARCS HI (A)	ARCS HI (B)
A 3W DVS LO	3(A)+3(B)	11	dV-SUB (A)	dV-SUB (B)	ARCS LOW (A)	ARCS LOW (B)	ARCS HI (A)	ARCS HI (B)
A 3W DVS HI	3(A)+3(B)	12	dV-SUB (A)	dV-SUB (B)	ARCS LOW (A)	ARCS LOW (B)	ARCS HI (A)	ARCS HI (B)
A 3WX DVS L	3(A)+3(B)	13	dV-SUB (A)	dV-SUB (B)	ARCS LOW (A)	ARCS LOW (B)	ARCS HI (A)	ARCS HI (B)
A 3WX DVS H	3(A)+3(B)	14	dV-SUB (A)	dV-SUB (B)	ARCS LOW (A)	ARCS LOW (B)	ARCS HI (A)	ARCS HI (B)
112XT FIL	3(A)+3(B)	15	FULL (A)	FULL (B)	112XT LOW (A)	112XT LOW (B)	112XT HI (A)	112XT HI (B)
112XT FOH	3(A)+3(B)	16	FULL (A)	FULL (B)	112XT LOW (A)	112XT LOW (B)	112XT HI (A)	112XT HI (B)
112XT MON	3(A)+3(B)	17	FULL (A)	FULL (B)	112XT LOW (A)	112XT LOW (B)	112XT HI (A)	112XT HI (B)
112 SB115	3(A)+3(B)	18	SB115 (A)	SB115 (B)	112XT LOW (A)	112XT LOW (B)	112XT HI (A)	112XT HI (B)
112 X 115	3(A)+3(B)	19	SB115 (A)	SB115 (B)	112XT LOW (A)	112XT LOW (B)	112XT HI (A)	112XT HI (B)
112 SB118	3(A)+3(B)	20	SB118 (A)	SB118 (B)	112XT LOW (A)	112XT LOW (B)	112XT HI (A)	112XT HI (B)
112 X 118	3(A)+3(B)	21	SB118 (A)	SB118 (B)	112XT LOW (A)	112XT LOW (B)	112XT HI (A)	112XT HI (B)
112 SB218	3(A)+3(B)	22	SB218 (A)	SB218 (B)	112XT LOW (A)	112XT LOW (B)	112XT HI (A)	112XT HI (B)
112 X 218	3(A)+3(B)	23	SB218 (A)	SB218 (B)	112XT LOW (A)	112XT LOW (B)	112XT HI (A)	112XT HI (B)
112 DVSUB	3(A)+3(B)	24	dV-SUB (A)	dV-SUB (B)	112XT LOW (A)	112XT LOW (B)	112XT HI (A)	112XT HI (B)
112 X dVS	3(A)+3(B)	25	dV-SUB (A)	dV-SUB (B)	112XT LOW (A)	112XT LOW (B)	112XT HI (A)	112XT HI (B)
115XT FIL	3(A)+3(B)	26	FULL (A)	FULL (B)	115XT LOW (A)	115XT LOW (B)	115XT HI (A)	115XT HI (B)
115XT FOH	3(A)+3(B)	27	FULL (A)	FULL (B)	115XT LOW (A)	115XT LOW (B)	115XT HI (A)	115XT HI (B)
115XT MON	3(A)+3(B)	28	FULL (A)	FULL (B)	115XT LOW (A)	115XT LOW (B)	115XT HI (A)	115XT HI (B)
115 SB115	3(A)+3(B)	29	SB115 (A)	SB115 (B)	115XT LOW (A)	115XT LOW (B)	115XT HI (A)	115XT HI (B)
115 X 115	3(A)+3(B)	30	SB115 (A)	SB115 (B)	115XT LOW (A)	115XT LOW (B)	115XT HI (A)	115XT HI (B)
115 SB118	3(A)+3(B)	31	SB118 (A)	SB118 (B)	115XT LOW (A)	115XT LOW (B)	115XT HI (A)	115XT HI (B)
115 X 118	3(A)+3(B)	32	SB118 (A)	SB118 (B)	115XT LOW (A)	115XT LOW (B)	115XT HI (A)	115XT HI (B)
115 SB218	3(A)+3(B)	33	SB218 (A)	SB218 (B)	115XT LOW (A)	115XT LOW (B)	115XT HI (A)	115XT HI (B)
115 X 218	3(A)+3(B)	34	SB218 (A)	SB218 (B)	115XT LOW (A)	115XT LOW (B)	115XT HI (A)	115XT HI (B)
115 DVSUB	3(A)+3(B)	35	dV-SUB (A)	dV-SUB (B)	115XT LOW (A)	115XT LOW (B)	115XT HI (A)	115XT HI (B)
115 X dVS	3(A)+3(B)	36	dV-SUB (A)	dV-SUB (B)	115XT LOW (A)	115XT LOW (B)	115XT HI (A)	115XT HI (B)
HiQ FILL	3(A)+3(B)	37	FULL (A)	FULL (B)	115XT HiQ LOW (A)	115XT HiQ LOW (B)	115XT HiQ HI (A)	115XT HiQ HI (B)
HiQ FOH	3(A)+3(B)	38	FULL (A)	FULL (B)	115XT HiQ LOW (A)	115XT HiQ LOW (B)	115XT HiQ HI (A)	115XT HiQ HI (B)
HiQ MON	3(A)+3(B)	39	FULL (A)	FULL (B)	115XT HiQ LOW (A)	115XT HiQ LOW (B)	115XT HiQ HI (A)	115XT HiQ HI (B)
115FM 2W	3(A)+3(B)	40	FULL (A)	FULL (B)	115FM LOW (A)	115FM LOW (B)	115FM HI (A)	115FM HI (B)
115FM 2WX	3(A)+3(B)	41	FULL (A)	FULL (B)	115FM LOW (A)	115FM LOW (B)	115FM HI (A)	115FM HI (B)
FM SB115	3(A)+3(B)	42	SB115 (A)	SB115 (B)	115FM LOW (A)	115FM LOW (B)	115FM HI (A)	115FM HI (B)
FM SB118	3(A)+3(B)	43	SB118 (A)	SB118 (B)	115FM LOW (A)	115FM LOW (B)	115FM HI (A)	115FM HI (B)
FM SB218	3(A)+3(B)	44	SB218 (A)	SB218 (B)	115FM LOW (A)	115FM LOW (B)	115FM HI (A)	115FM HI (B)
FM dVSUB	3(A)+3(B)	45	dV-SUB (A)	dV-SUB (B)	115FM LOW (A)	115FM LOW (B)	115FM HI (A)	115FM HI (B)

.....28

Table 15: Nominal floor monitor distance (to performer) and monitor separation versus performer height 44

Table 16: L-ACOUSTICS Subwoofer Specification Summary.....45

0. INTRODUCTION

Effectively covering an audience is the goal of any sound reinforcement system design. This is straightforward in small spaces where a left/right stereo configuration is suitable provided that the available power is sufficient, i.e., a stereo pair of loudspeakers is relatively easy to install and the results are fairly predictable. Things become more complex when larger audience area coverage is required and there are two possible approaches:

1) Multiplying the number of sound sources by dividing the audience into areas which are covered by individual sources. In this case, the Haas effect is exploited and the goal is to reduce audible interference effects by dissociating or decoupling the individual sound sources (delay lines can also be introduced to provide proper localization). This is the distributed sound reinforcement, or multiple sound source approach, and the XT line of enclosures is highly suited to this type of sound design.

2) Coupling a number of individual sound sources to form a loudspeaker array with the objective that each array becomes the equivalent of a single sound source.

For the second approach, conditions for achieving proper coupling of individual arrayed sound sources have been defined by Dr. Christian Heil and Professor Marcel Urban, in "Sound Fields Radiated by Multiple Sound Source Arrays" (AES paper preprint 3269, presented at the 92nd AES convention in Vienna, 1992). Additional conditions were published in the AES Journal paper "Wavefront Sculpture Technology", JAES Vol. 51, No. 10, October 2003. The theory that was developed defines the acoustic coupling conditions required for effectively arraying individual sound sources. These conditions, termed Wavefront Sculpture Technology (WST) criteria are satisfied by the ARCS®, dV-DOSC™ and V-DOSC® loudspeaker systems which are intended for medium- to large-scale sound reinforcement applications.

However, in most cases, it is not feasible to meet WST criteria while at the same time having a sufficient level of versatility for small- to medium-scale applications. In other words, if a product is to be arrayable, it typically leads to an enclosure design that cannot be used in single or small configurations. A different set of loudspeaker enclosure design specifications apply that are more suited to the multiple source sound design approach.

The L-ACOUSTICS approach to distributed sound reinforcement using multiple sound sources starts with the specification that each individual loudspeaker enclosure should behave as a totally coherent source. This criterion can be achieved using coaxial components which are well-suited to the design of highly versatile, small format systems. The use of coaxial components has been popularized over the years in studio monitoring applications – to the best of our knowledge, L-ACOUSTICS was the first manufacturer to use coaxial technology in professional sound reinforcement applications and the current XT line is a continuation of the heritage that was introduced in 1989 with the MTD line.

Coaxial, dual concentric components provide a smooth transition between the LF and HF sections since, by definition, the directivity of the two transducers is matched at the crossover frequency. In addition, the directivity is horizontally, vertically and diagonally symmetric (axi-symmetric). This results in true, single source behavior and the performance obtained is superior in terms of coherence when compared with any combination of two independent sound sources (separate woofer plus horn-loaded compression driver, for example). This is the case even if the independent sources are designed to provide the same directivity (which is rarely the case) since the acoustic centers of the two sources are not located at the same physical location.

The coaxial configuration provides the optimum directivity required in order to obtain even coverage and constant tonal balance in a typical semi-reverberant auditorium. Extensive sound design and installation experience acquired by L-ACOUSTICS over the years confirms this and we are confident that coaxial, axi-symmetric loudspeaker enclosures are the best tools for multiple source, distributed sound design. The coaxial performance of the 112XT, 115XT and 115XT HiQ loudspeaker enclosures provide the basic starting tools for distributed sound reinforcement design.

1. THE XT SYSTEM

The XT line consists of: 112XT, 115XT and 115XT HiQ loudspeaker enclosures, XT rigging accessories and SB115, SB118, SB218 or dV-SUB subwoofers. OEM factory presets are provided for approved digital signal processors (XTA DP224, DP226, DP6i and BSS 334, 336, 366, Soundweb and Lake Contour). Please note that amplifier racks and loudspeaker cables are not specified but should meet the minimum specification requirements outlined in this manual.

1.1 XT SYSTEM COMPONENTS

LOUDSPEAKER ENCLOSURES

(1) 112XT
Active 2-way coaxial loudspeaker with 90-degree axi-symmetrical coverage, containing 12" loudspeaker, 1.4" exit high frequency compression driver

(2) 115XT
Active 2-way coaxial loudspeaker with 80-degree axi-symmetrical coverage, containing 15" loudspeaker, 1.4" exit high frequency compression driver

(3) 115XT HiQ
Active 2-way loudspeaker enclosure with 50-degree axi-symmetrical coverage, containing 15" loudspeaker, 1.4" exit neodymium compression driver loaded by a conical waveguide

112XT

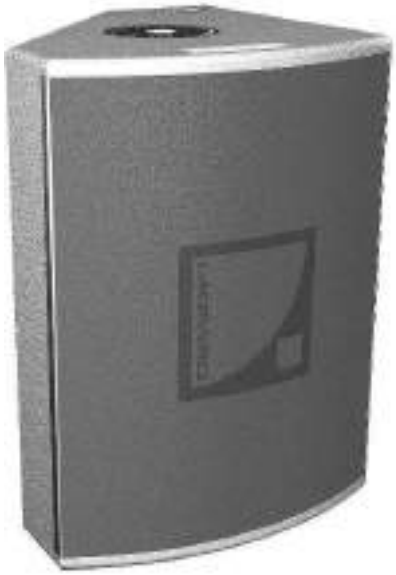

115XT

115XT HiQ

Figure 1: XT Loudspeaker Enclosures

XT RIGGING ACCESSORIES

(4) ETR112XT

Adjustable U-Bracket for ceiling, wall or scaffold mounting of the 112XT in either horizontal or vertical orientations

(5) CPL112XT

Coupling adapter bars used in conjunction with ETR112XT to array two 112XT enclosures vertically with independent tilt adjustment for each enclosure

(6) ETR115XT

Adjustable U-Bracket for ceiling, wall or scaffold mounting of the 115XT or the 115XT HiQ in either horizontal or vertical orientations

(7) CPL115XT

Coupling adapter bars used in conjunction with ETR115XT to array two 115XT or 115XT HiQ enclosures vertically with independent tilt adjustment for each enclosure

(8) XTLIFTBAR

Allows for single point rigging of 112XT, 115XT or 115XT HiQ loudspeaker enclosures with 5 pick points available for tilt adjustment

(9) PION 2

Double stud Aeroquip flytrack fitting-to-ring for permanent installation of 112XT or 115XT enclosures or for use in conjunction with ETR112XT or ETR115XT as a safety attachment

Figure 2: XT Rigging Components

SUBWOOFER ENCLOSURES

(10) SB115
Front-loaded, bass-reflex design, single 15" subwoofer for low frequency extension

(11) SB118
Dual-vented bandpass-loaded, single 18" subwoofer for high level, extended bandwidth

(12) SB218
Front-loaded, bass-reflex design, dual 18" subwoofer for high level, extended bandwidth

(13) dV-SUB
Dual-vented bandpass-loaded triple 15" subwoofer for high level, low frequency extension

For more information concerning SB115, SB118 and SB218 subwoofer enclosures please consult the SB Subwoofer User's Manual

SB115

SB118

SB218

dV-SUB

Figure 3: XT Subwoofer Options

LOUDSPEAKER CABLING

(14) SP.7
Loudspeaker link cable, 4 conductor, 4 mm^2 conductor cross-section, 0.7 m (2 ft) length, equipped with Speakon connectors (for paralleling 2-way enclosures).

(15) SP7
Loudspeaker cable, 4 conductor, 4 mm^2 conductor cross-section, 7 m (20 ft) length, equipped with 2 x Speakon connectors.

(16) SP25
Loudspeaker cable, 4 conductor, 4 mm^2 conductor cross-section 25 m (80 ft) length, equipped with 2 x Speakon connectors.

(17) CC4FP
Female/female 4 conductor Speakon barrel adapter.

SP.7

SP7

SP25

CC4FP

Figure 4: Loudspeaker cabling options

AMPLIFICATION OPTIONS

(14) L-ACOUSTICS LA15a

Compact, light weight four-channel power amplifier (2 rack units, 8.6 kg), 370 watts per channel into 8 ohms, 600 watts per channel into 4 ohms.

(15) L-ACOUSTICS LA17a

Compact, light weight two-channel power amplifier (2 rack units, 8 kg), 430 watts per channel into 8 ohms, 840 watts per channel into 4 ohms.

(16) L-ACOUSTICS LA24a

Compact, light weight two-channel power amplifier (2 rack units, 10 kg), 1100 watts per channel into 8 ohms, 1500 watts per channel into 4 ohms.

(17) L-ACOUSTICS LA48a

Compact, light weight two-channel power amplifier (2 rack units, 10 kg), 1300 watts per channel into 8 ohms, 2300 watts per channel into 4 ohms.

L-ACOUSTICS LA15a

L-ACOUSTICS LA17a

L-ACOUSTICS LA24a

L-ACOUSTICS LA48a

Figure 5: XT Power Amplification Options

1.2 XT OVERVIEW

L-ACOUSTICS 112XT, 115XT and 115XT HiQ loudspeaker enclosures are intended for distributed sound reinforcement in high performance touring or fixed installation applications. All XT loudspeaker enclosures feature highly-advanced coaxial components and rigging accessories while benefiting from the flexibility afforded by application-engineered OEM digital presets.

The 112XT is an active 2-way loudspeaker containing a 1.4" exit compression driver that is directly loaded by the 12" loudspeaker in a coaxial configuration while the 115XT features a 15" loudspeaker. Both enclosures feature titanium diaphragm compression drivers – the only difference is the traditional ferrite motor used for the 112XT while the 115XT employs a neodymium type compression driver. The 115XT HiQ is an active 2-way loudspeaker enclosure containing a 1.4" exit neodymium compression driver (titanium diaphragm) loaded by a conical waveguide and assembled in a coaxial configuration along with a 15" loudspeaker.

XT loudspeakers are ideal for distributed sound reinforcement and can also be used in medium power front-of-house (FOH) applications for theatres, clubs, multi-purpose venues or corporate events. Examples of distributed systems include delay rings for large-scale installations, surround effects channels for theatre or multimedia, distributed reinforcement for sports venues or delays for speech reinforcement. For touring sound applications, XT loudspeakers provide a high performance distributed front fill system solution to complement the main FOH system coverage.

Although optimized for single operation, XT loudspeakers can be used in vertical arrays of two enclosures to enhance vertical coverage – for example, in theatre applications where one XT enclosure provides balcony coverage while the second provides floor coverage. In addition, due to their compact, wedge-shaped format and axi-symmetrical directivity, XT enclosures provide an exceptionally high performance floor monitor solution – particularly the 115XT HiQ which has been specifically optimized for touring applications. When used with the SB118 (or other L-ACOUSTICS subwoofers), XTs are also ideal for side fill or drum monitoring.

Application-engineered OEM presets are available for approved digital processors, providing flexible solutions for a wide variety of 2- and 3-way operating modes. For 2-way operation, 3 types of presets are provided:

> FRONT presets are for standalone FOH operation (without subwoofers) where low and high frequency shelving equalization provides a frequency response contour suitable for music applications.
>
> FILL presets provide nominally flat response for use in speech reinforcement and classical music applications or when XT enclosures are used as a close proximity fill enclosure.
>
> *Both FRONT and FILL presets are derived under freefield measurement conditions.*
>
> MONITOR presets include additional low frequency equalization to account for half-space loading conditions and are intended for floor monitoring applications or fixed installations where the XT is wall- or ceiling-mounted.
>
> *MONITOR presets are derived under half-space measurement conditions.*

A variety of 3-way presets are provided for use of XT enclosures with L-ACOUSTICS subwoofers. Standard 3W presets utilize a complimentary 100 Hz crossover point for the XT and its companion subwoofer and are recommended for closely coupled applications. Alternatively, when XT enclosures are flown and subwoofers are ground stacked, 3WX presets can be employed where an 80 Hz low pass filter is applied to the subwoofer and 112XT, 115XT or 115XT HiQ high pass filtering is set to 45, 41 or 45 Hz, respectively.

Pole mount sockets and side-mounted fly track sections are included as standard on XT enclosures and optional rigging accessories include an adjustable U-bracket for ceiling, wall or scaffold mounting (vertical or horizontal orientations), coupling adapter bars for vertical coupling of two XT enclosures (independent tilt adjustment for each enclosure) and the XTLIFTBAR accessory for single point rigging (5 pick points available allowing for tilt adjustment).

1.3 112XT SPECIFICATIONS

The 112XT is an active, two-way, coaxial full range loudspeaker containing one direct radiating, bass reflex-loaded, 12 inch low frequency transducer and one 1.4 inch exit, 3 inch voice coil diameter, titanium alloy diaphragm compression driver. As a full range system, the frequency response is 65 Hz to 18 kHz with less than ± 3 dB variation and the usable bandwidth is 55 Hz to 18 kHz (-10 dB).

The cone body of the low frequency component provides pattern control loading of the compression driver and yields a 90-degree (± 20 degrees) conical dispersion pattern that is axi-symmetrical. The crossover point between low and high frequency components is 1 kHz with 24 dB per octave Linkwitz-Riley characteristics. Long term power handling is 290 Wrms for the low section and 135 Wrms for the high section at a nominal 8 ohm impedance. Connection to the loudspeaker is made via two parallel 4-pin Neutrik Speakon connectors.

The 112XT has a truncated wedge shape with a curved front profile. Dimensions are 54 cm (21.3 in) high, 41 cm (16.1 in) wide at the front of the enclosure, 16.5 cm (6.5 in) wide at the rear of the enclosure and 37.5 cm (14.8 in) deep. When used on its rear side, the front baffle of the enclosure is oriented at a 45 degree angle with respect to vertical, allowing the enclosure to be used as a floor monitor. Enclosure weight is 27 kg (59.5 lbs).

Cabinet construction consists of 30 mm (1.18 in) and 18 mm (0.70 in) Baltic birch plywood with internal steel bracing and joints that are sealed, screwed and rabbeted. The finish is maroon-gray high resilient paint. The front of the enclosure is protected by a black powder-coated, 1.5 mm (0.06 in) thick steel grill that is covered with 10 mm (0.4 in) thick acoustically transparent open cell foam.

The 112XT has two side-recessed flytrack sections and 36 mm (1.42 in) diameter pole mount sockets mounted on the top and bottom sides. Pole mount sockets function with the ETR112XT U-bracket accessory for rigging the enclosure in either horizontal or vertical orientations, providing angular adjustment with 10 degree resolution. Two CPL112XT coupling adapter bars can be used in conjunction with the ETR112XT U-bracket, allowing two 112XT enclosures to be flown vertically while providing independent tilt adjustment for each enclosure. The XTLIFTBAR accessory functions with either of the pole mount sockets and provides five attachment points for rigging purposes.

The 112XT loudspeaker is used with an approved digital processor with OEM presets for active 2-way operation or 3-way operation in conjunction with additional subwoofers (L-ACOUSTICS SB115, SB118, SB218 or dV-SUB).

Figure 6: 112XT Enclosure

1.4 115XT SPECIFICATIONS

The 115XT is an active, two-way, coaxial full range loudspeaker containing one direct radiating, bass reflex-loaded, 15 inch low frequency transducer and one 1.4 inch exit, 3 inch voice coil diameter, titanium alloy diaphragm, neodymium compression driver. As a full range system, frequency response is 60 Hz to 18 kHz with less than ± 3 dB variation and usable bandwidth is 50 Hz to 18 kHz (-10 dB).

The cone body of the low frequency component provides pattern control loading of the compression driver and yields an 80-degree (± 20 degree) conical dispersion pattern that is axi-symmetrical. The crossover point between low and high frequency components is 1 kHz with 24 dB per octave Linkwitz-Riley characteristics. Long term power handling is 250 Wrms for the low section and 85 Wrms for the high section at a nominal 8 ohm impedance. Connection to the loudspeaker is made via two parallel 4-pin Neutrik Speakon connectors.

The 115XT enclosure has a truncated wedge shape with a curved front profile. Dimensions are 58 cm (22.8 in) high, 44 cm (17.3 in) wide at the front of the enclosure, 16.7 cm (6.6 in) wide at the rear of the enclosure and 47.5 cm (18.7 in) deep. When used on its rear side, the front baffle of the 115XT is oriented at a 41 degree angle with respect to vertical, allowing the enclosure to be used as a floor monitor. Enclosure weight is 29.5 kg (65.0 lbs).

Cabinet construction consists of 30 mm (1.18 in) and 18 mm (0.70 in) Baltic birch plywood with internal steel bracing and joints that are sealed, screwed and rabbeted. The finish is maroon-gray high resilient paint. The front of the enclosure is protected by a black powder-coated, 1.5 mm (0.06 in) thick steel grill that is covered with 10 mm (0.39 in) thick acoustically transparent open cell foam.

The 115XT has two side-recessed flytrack sections and 36 mm (1.42 in) diameter pole mount sockets mounted on the top and bottom sides. Pole mount sockets function with the ETR115XT U-bracket accessory for rigging the enclosure in either horizontal or vertical orientations, providing angular adjustment with 10 degree resolution. Two CPL115XT coupling adapter bars can also be used in conjunction with the ETR115XT U-bracket, allowing two 115XT enclosures to be flown vertically while providing independent tilt adjustment for each enclosure. The XTLIFTBAR accessory functions with either of the pole mount sockets and provides five attachment points for rigging purposes.

The 115XT loudspeaker is used with an approved digital processor with OEM presets for active 2-way operation or 3-way operation in conjunction with additional subwoofers (L-ACOUSTICS SB115, SB118, SB218 or dV-SUB).

Figure 7: 115XT Enclosure

1.5 115XT HiQ SPECIFICATIONS

The 115XT HiQ is an active, two-way, coaxial full range loudspeaker containing one direct radiating, bass reflex-loaded, 15 inch low frequency transducer and one 1.4 inch exit, titanium alloy diaphragm, neodymium compression driver. As a full range system, the frequency response is 65 Hz to 18 kHz with less than ± 3 dB variation and the usable bandwidth is 50 Hz to 20 kHz (-10 dB).

Pattern control loading for the compression driver is provided by a concentrically-mounted conical waveguide that yields a 50-degree axi-symmetrical pattern while loading the 15" loudspeaker for improved upper mid bass efficiency. This results in exceptional power response stability with high immunity to feedback for floor monitoring applications. The crossover point between low and high frequency sections is 1 kHz with 24 dB per octave Linkwitz-Riley characteristics. Long term power handling is 450 Wrms for the low section and 125 Wrms for the high section at a nominal 8-ohm impedance. Connection is made via two parallel 4-pin Neutrik Speakon connectors.

The 115XT HiQ has a compact low profile that is suitable for stage monitoring with listening angles of 30- or 60-degrees with respect to a vertical axis perpendicular to the floor. Dimensions are 58 cm (22.8 in) wide, 44.6 (17.6 in) deep and the height above floor level is 36.5 cm (14.4 in) when used as a floor monitor in the 30-degree position. Cabinet construction consists of 18 mm (0.70 in) and 30 mm (1.18 in) Baltic birch plywood with joints that are sealed, screwed and rabbeted. The finish is maroon-gray high resilient paint and the front of the enclosure is protected by a 1.5 mm (0.06 in) thick black epoxy-coated steel grill that is covered with 4 mm (0.16 in) thick acoustically-transparent, highly-resistant, technically-advanced grille cloth.

The 115XT HiQ has two 36 mm (1.42 in) diameter pole mount sockets that function with the ETR115XT U-bracket accessory for rigging the enclosure in either horizontal or vertical orientations, providing angular adjustment with 10 degree resolution. Two CPL115XT coupling adapter bars can also be used in conjunction with the ETR115XT U-bracket, allowing two 115XT HiQ enclosures to be flown vertically while providing independent tilt adjustment for each enclosure. The XTLIFTBAR accessory functions with either of the pole mount sockets and provides five attachment points for rigging purposes.

The 115XT HiQ loudspeaker is used with an approved digital processor with OEM presets for active 2-way operation or 3-way operation in conjunction with additional subwoofers (L-ACOUSTICS SB115, SB118, SB218 or dV-SUB).

Figure 8: 115XT HiQ Enclosure and Coaxial Component Detail

2. POWERING XT ENCLOSURES

It is important that power amplifiers with sufficient power are used to power XT enclosures since headroom is less likely to damage loudspeaker components than clipping. Apart from normal standards regarding construction, protection, cooling and damping factor that are expected of any professional sound reinforcement amplifier, the XT system has been calibrated to be used with amplifiers with the following specifications:

GAIN STRUCTURE
Amplifiers should have 32 dB gain for all sections (sub, low and high). Limiter thresholds and output channel gains of all OEM presets have been adjusted to be used with amplifiers having 32 dB gain.

LIMITERS
Peak limiters on all amplifier outputs with soft clipping characteristics; attack time less than 3msec

COOLING
Temperature speed-controlled fan recommended

In practice, L-ACOUSTICS specifies power amplifiers with output power equivalent to twice the RMS power handling for sub or low sections and equivalent to the peak power handling for the high section. These requirements typically allow the same amplifier to be used for both sections since the drive level for the HF section is attenuated relative to the LF section to account for efficiency differences (i.e., full continuous power will never be delivered to the HF section due to this attenuation). When the same amplifier is used for the HF section, the extra available power then translates into headroom for improved high frequency transient response.

Sections 2.2, 2.3 and 2.4 give a summary of rms and peak power handling capabilities and recommended power amplifier specifications for operation of single or multiple XT enclosures in parallel.

2.1 CONNECTORS AND CABLES

XT loudspeaker enclosures are supplied with dual NL4 Speakon connectors. The two Speakon connectors are internally wired in parallel, allowing for loop through connection and parallel operation of multiple XT enclosures. Speakon connectors are wired as follows:

1+ = LF+
1 - = LF -
2+ = HF+
2 - = HF –

In order to preserve high damping factor (essential to the sonic qualities of the system and to prevent overshoot of cone displacement which can result in mechanical damage), it is desirable to keep loudspeaker cables as short as possible and with a gauge offering low resistance per unit length. The following chart provides information regarding the minimum wire cross-section versus length:

Table 1: Maximum Recommended Length for Damping Factor > 20

Cross Section	Gauge	8 ohms		4 ohms	
Metric (mm2)	Imperial	Metric	Imperial	Metric	Imperial
2.5	13	30 m	100 ft	15 m	45 ft
4	11	50 m	150 ft	25 m	75 ft
6	8	75 m	225 ft	37 m	110 ft
10	6	120 m	360 ft	60 m	180 ft

L-ACOUSTICS Speakon loudspeaker cables (SP7, SP25, SP.7) are 4 conductor cables with 4 mm^2 conductor cross-section (11 gauge). SP25 cables can be used for 25 meter cable runs to power a 4 ohm load (2 XT enclosures in parallel) while maintaining a damping factor greater than 20.

2.2 POWERING 112XT

Continuous (rms) and peak power handling ratings for the 112XT are as follows:

Table 2: Load and Power Ratings for 112XT

112XT ENCLOSURE RATINGS

	ONE 112XT				TWO 112XT				THREE 112XT				FOUR 112XT			
SECTION	LOAD	RMS	PEAK	REC'D	LOAD	RMS	PEAK	REC'D	LOAD	RMS	PEAK	REC'D	LOAD	RMS	PEAK	REC'D
LOW	8	290	1160	**580**	4	580	2320	**1160**	2.7	870.0	3480	**1740**	2	1160	4640	**2320**
HIGH	8	135	540	**540**	4	270	1080	**1080**	2.7	400.0	1600	**1600**	2	540	2160	**2160**

For amplifying **1 x 112XT**, the recommended amplifier specifications are:

* LOW Amplifier Output Power: 580 W into 8 ohms
* HIGH Amplifier Output Power: 540 W into 8 ohms

For amplifying **2 x 112XT in parallel**, the recommended amplifier specifications are:

* LOW Amplifier Output Power: 1160 W into 4 ohms
* HIGH Amplifier Output Power: 1080 W into 4 ohms

Based on these specifications, recommended L-ACOUSTICS LA power amplifier specifications and MLS switch settings are summarized in Tables 3 and 4. In these tables, boldface settings indicate a good power match based on the recommended power amplifier specification.

Table 3: Recommended power amplification and MLS switch settings for 112XT low section

112XT LOW SECTION REC'D POWER		AMPLIFIER OUTPUT POWER (MLS SETTING)		
LOAD (ohms)	POWER (W)	LA 17a	LA 24a	LA 48a
2	2320	do not use	do not use	**2400 (-2 dB)**
2.7	1740	1080 (0 dB)	1635 (0 dB)	**2130 (-2 dB)**
4	1160	840 (0 dB)	**1300 (-2 dB)**	**1600 (-2 dB)**
8	580	430 (0 dB)	**700 (-2 dB)**	**820 (-2 dB)**

Table 4: Recommended power amplification and MLS switch settings for 112XT high section

112XT HI SECTION REC'D POWER		AMPLIFIER OUTPUT POWER (MLS SETTING)		
LOAD (ohms)	REC'D POWER	LA 17a	LA 24a	LA 48a
2	2160	do not use	do not use	2000 (-4 dB)
2.7	1600	1080 (0 dB)	**1635 (0 dB)**	**1665 (-4 dB)**
4	1080	840 (0 dB)	**1300 (-2 dB)**	1000 (-4 dB)
8	540	430 (0 dB)	**700 (-2 dB)**	520 (-4 dB)

L-ACOUSTICS LA amplifier MLS switch settings for powering the 112XT are summarized in Table 5.

Table 5: Recommended MLS switch settings for powering 112XT

	MLS SWITCH SETTING		
	LA17a	LA24a	LA48a
112XT LO SECTION	0 dB	-2 dB	-2 dB
112XT HI SECTION	0 dB	-2 dB	-4 dB

2.3 POWERING 115XT

Continuous (rms) and peak power handling ratings for the 115XT are as follows:

Table 6: Load and Power Ratings for 115XT

115XT ENCLOSURE RATINGS

	ONE 115XT				TWO 115XT				THREE 115XT				FOUR 115XT			
SECTION	LOAD	RMS	PEAK	REC'D	LOAD	RMS	PEAK	REC'D	LOAD	RMS	PEAK	REC'D	LOAD	RMS	PEAK	REC'D
LOW	8	250	1000	**500**	4	500	2000	**1000**	2.7	750.0	3000	**1500**	2	1000	4000	**2000**
HIGH	8	85	350	**350**	4	170	700	**700**	2.7	250.0	1000	**1000**	2	350	1400	**1400**

For amplifying **1 x 115XT**, the recommended amplifier specifications are:

* LOW Amplifier Output Power: 500 W into 8 ohms
* HIGH Amplifier Output Power: 350 W into 8 ohms

For amplifying **2 x 115XT in parallel**, the recommended amplifier specifications are:

* LOW Amplifier Output Power: 1000 W into 4 ohms
* HIGH Amplifier Output Power: 700 W into 4 ohms

Based on these specifications, recommended L-ACOUSTICS LA power amplifier specifications and MLS switch settings are summarized below in Tables 7 and 8. In these tables, boldface settings indicate a good power match based on the recommended power amplifier specification.

Table 7: Recommended power amplification and MLS switch settings for 115XT low section

115XT LOW SECTION REC'D POWER		AMPLIFIER OUTPUT POWER (MLS SETTING)		
LOAD (ohms)	POWER (W)	LA 17a	LA 24a	LA 48a
2	2000	do not use	do not use	**2000 (-4 dB)**
2.7	1500	1080 (0 dB)	**1635 (0 dB)**	**1665 (-4 dB)**
4	1000	840 (0 dB)	**1300 (-2 dB)**	**1000 (-4 dB)**
8	500	430 (0 dB)	**700 (-2 dB)**	**520 (-4 dB)**

Table 8: Recommended power amplification and MLS switch settings for 115XT high section

115XT HI SECTION REC'D POWER		AMPLIFIER OUTPUT POWER (MLS SETTING)		
LOAD (ohms)	REC'D POWER	LA 17a	LA 24a	LA 48a
2	1400	1200 (0 dB)	**1400 (-4 dB)**	**1660 (-5 dB)**
2.7	1000	**1080 (0 dB)**	**1180 (-4 dB)**	**1380 (-5 dB)**
4	700	**840 (0 dB)**	**750 (-4 dB)**	**830 (-5 dB)**
8	350	**430 (0 dB)**	**400 (-4 dB)**	**430 (-5 dB)**

L-ACOUSTICS LA amplifier MLS switch settings for powering the 115XT are summarized in Table 9.

Table 9: Recommended MLS switch settings for powering 115XT

	MLS SWITCH SETTING		
	LA17a	LA24a	LA48a
115XT LO SECTION	0 dB	-2 dB	-4 dB
115XT HI SECTION	0 dB	-4 dB	-5 dB

2.4 POWERING 115XT HiQ

Continuous (rms) and peak power handling ratings for the 115XT HiQ are as follows:

Table 10: Load and Power Ratings for 115XT HiQ

	ONE 115XT HiQ				TWO 115XT HiQ				THREE 115XT HiQ				FOUR 115XT HiQ			
SECTION	LOAD	RMS	PEAK	REC'D	LOAD	RMS	PEAK	REC'D	LOAD	RMS	PEAK	REC'D	LOAD	RMS	PEAK	REC'D
LOW	8	450	1800	**900**	4	900	3600	**1800**	2.7	1350	5400	**2700**	2	1800	7200	**3600**
HIGH	8	125	500	**500**	4	250	1000	**1000**	2.7	375	1500	**1500**	2	500	2000	**2000**

For amplifying **1 x 115XT HiQ**, the recommended amplifier specifications are:

* LOW Amplifier Output Power: 900 W into 8 ohms
* HIGH Amplifier Output Power: 500 W into 8 ohms

For amplifying **2 x 115XT HiQ in parallel**, the recommended amplifier specifications are:

* LOW Amplifier Output Power: 1800 W into 4 ohms
* HIGH Amplifier Output Power: 1000 W into 4 ohms

Based on these specifications, recommended L-ACOUSTICS LA power amplifier specifications and MLS switch settings are summarized below in Tables 11 and 12. In these tables, boldface settings indicate a good power match based on the recommended power amplifier specification.

Table 11: Recommended power amplification and MLS switch settings for 115XT HiQ low section

115XT HiQ LOW SECTION REC'D POWER		AMPLIFIER OUTPUT POWER (MLS SETTING)		
LOAD (ohms)	REC'D POWER	LA 17a	LA 24a	LA 48a
2	3600	1200 do not use	1700 do not use	2900 do not use
2.7	2700	1080 do not use	1635 do not use	**2700** **(0 dB)**
4	1800	840 do not use	1500 (0 dB)	**2300** **(0 dB)**
8	900	430 do not use	**1100** **(0 dB)**	**1300** **(0 dB)**

Table 12: Recommended power amplification and MLS switch settings for 115XT HiQ high section

115XT HiQ HI SECTION REC'D POWER		AMPLIFIER OUTPUT POWER (MLS SETTING)		
LOAD (ohms)	REC'D POWER	LA 17a	LA 24a	LA 48a
2	2000	1200 do not use	1700 do not use	**2000** **(-4 dB)**
2.7	1500	1080 do not use	1465 (-2 dB)	**1665** **(-4 dB)**
4	1000	840 (0 dB)	**1300** **(-2 dB)**	**1000** **(-4 dB)**
8	500	430 (0 dB)	**700** **(-2 dB)**	**520** **(-4 dB)**

L-ACOUSTICS LA amplifier MLS switch settings for powering the 115XT HiQ are summarized in Table 13.

Table 13: Recommended MLS switch settings for powering 115XT HiQ

115XT HiQ MLS SWITCH SETTINGS

LA17a	LA24a	LA48a	
do not use	0 dB	0 dB	115XT HiQ
0 dB	-2 dB	-5 dB	115XT HiQ

L-ACOUSTICS LA 15a POWER MATRIX

		MLS SWITCH SETTING	
LOAD	CONFIGURATION	-3 dB	0 dB
16 ohms	Quad (4 channel)	95	200
8 ohms	Quad (4 channel)	200	370
4 ohms	Quad (4 channel)	380	600
2.7 ohms	Quad (4 channel)	460	
2 ohms	Quad (4 channel)	500	

L-ACOUSTICS LA 17a POWER MATRIX

		MLS SWITCH SETTING	
LOAD	CONFIGURATION	-3 dB	0 dB
16 ohms	Stereo (2 channel)	110	215
8 ohms	Stereo (2 channel)	220	430
4 ohms	Stereo (2 channel)	430	840
2.7 ohms	Stereo (2 channel)	720	1080
2 ohms	Stereo (2 channel)	870	1200

L-ACOUSTICS LA 24a POWER MATRIX

		MLS SWITCH SETTING			
LOAD	CONFIGURATION	-5 dB	-4 dB	-2 dB	0 dB
16 ohms	Stereo (2 channel)	160	200	340	520
8 ohms	Stereo (2 channel)	300	400	700	1100
4 ohms	Stereo (2 channel)	600	750	1300	1500
2.7 ohms	Stereo (2 channel)	1000	1180	1465	1635
2 ohms	Stereo (2 channel)	1200	1400	1550	1700

L-ACOUSTICS LA 48a POWER MATRIX

		MLS SWITCH SETTING			
LOAD	CONFIGURATION	-5 dB	-4 dB	-2 dB	0 dB
16 ohms	Stereo (2 channel)	220	260	410	650
8 ohms	Stereo (2 channel)	430	520	820	1300
4 ohms	Stereo (2 channel)	830	1000	1600	2300
2.7 ohms	Stereo (2 channel)	1380	1665	2130	2700
2 ohms	Stereo (2 channel)	1660	2000	2400	2900

Table 14: Output Power Ratings and MLS Switch Settings for L-ACOUSTICS LAa Amplifiers

3. XT CONTROL AND PROCESSING

A digital processor is specified for use with XT enclosures in order to provide the following functions: crossover filtering, component time alignment, corrective component equalization, system protection and system equalization. OEM presets are provided for a number of approved digital processors including: BSS FDS-366 Omnidrive Compact Plus, BSS FDS-334 Minidrive, BSS FDS-336 Minidrive, BSS Soundweb, XTA DP224, XTA DP226, XTA DP6i and Lake Contour. Presets are distributed via PCMCIA card (except for Minidrive, Soundweb and Lake Contour), alternatively, presets can be downloaded from the L-ACOUSTICS website (www.l-acoustics.com).

Since the XTA DP226 is a 2 input by 6 output unit, the DP224 is 2 x 4, the FDS-334 is 2 x 4, the FDS-336 is 2 x 6 and the FDS-366 is 3 x 6, exact internal wiring of your FOH drive rack and digital processor channel assignments will vary depending on the selected processor and the application. Carefully consider your flexibility requirements before selecting the type of processor to specify.

NOTE: ALWAYS REFER TO THE PRESET DESCRIPTION SHEET FOR YOUR PROCESSOR WHEN SELECTING PRESETS AND CONFIGURING YOUR DRIVE RACK.

3.1 GENERAL DESCRIPTION OF XT PRESETS

For 2-way operation, three types of presets are provided:

FRONT presets are for standalone FOH operation (without subwoofers) where low and high frequency shelving equalization provides a frequency response contour suitable for music applications.

FILL presets provide nominally flat response for use in speech reinforcement and classical music applications or when XT enclosures are used as a close proximity fill enclosure.

FRONT and FILL presets are derived under freefield measurement conditions.

MONITOR presets include additional low frequency equalization to account for half-space loading conditions and are intended for floor monitoring applications or fixed installations where the XT is wall- or ceiling-mounted.

MONITOR presets are derived under half space measurement conditions.

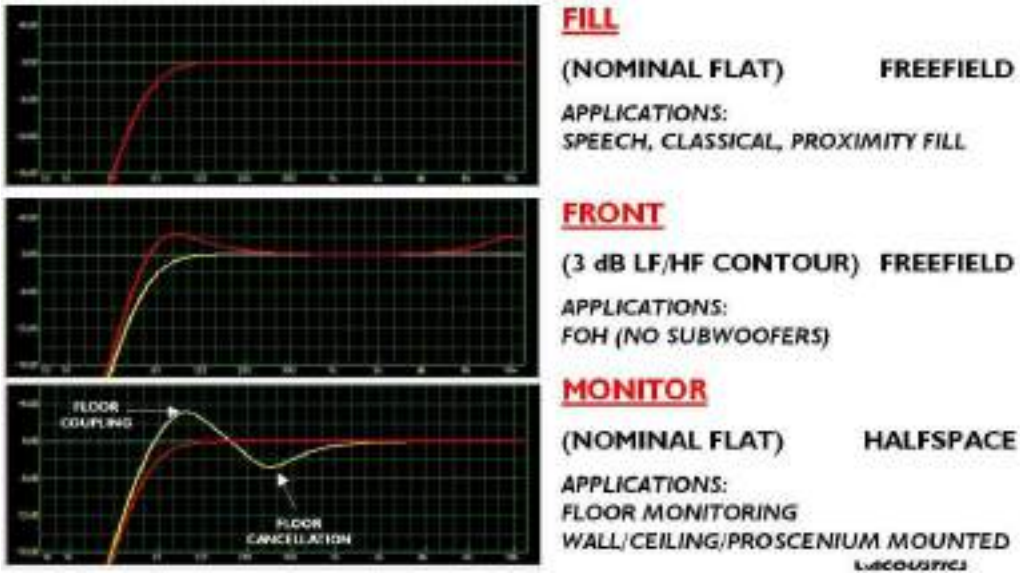

Figure 9 Front, Fill and Monitor Presets

A variety of 3-way presets are provided for use of XT loudspeaker enclosures with SB115, SB118, SB218 or dV-SUB subwoofers. Standard 3W presets utilize a complimentary 100 Hz crossover point for the XT and its companion subwoofer and are recommended for closely coupled applications. Alternatively, when XT enclosures are flown and subwoofers are ground stacked, 3WX presets can be employed where an 80 Hz low pass filter is applied to the subwoofers and 112XT, 115XT or 115XT HiQ high pass filtering is set at 45, 41 or 45 Hz, respectively.

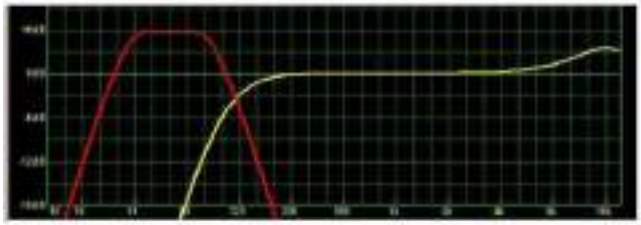

3W
(CLOSELY COUPLED)
100 Hz Crossover Point Optimizes Power/Bandwidth
3 dB HF/ 6 dB LF CONTOUR

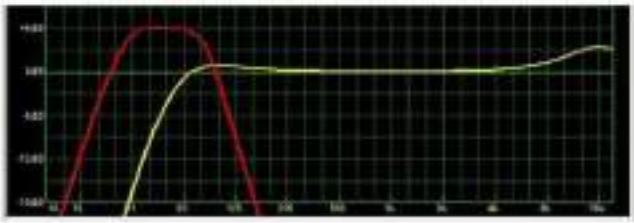

3WX
(PHYSICALLY SEPARATE)
80 Hz SUB LPF
50/55 Hz XT HPF
3 dB HF/ 6 dB LF CONTOUR

Figure 10: 3W and 3WX Presets

3.2 XT PRESET POLICY

According to L-ACOUSTICS policy, key preset parameters are software-protected and preset data or passwords are not available in order to preserve quality control, confidentiality and to maintain the integrity of L-ACOUSTICS system presets. Restricting access to presets is in no way meant to restrict flexibility or the creative process – on the contrary, software-protected presets are intended to enhance creativity by ensuring quality control and repeatability and providing users with a good starting point for system tuning.

Extensive engineering and real world testing goes into determining optimum presets – detailed polar measurements and weighted spatial averaging are used to determine component equalization, time alignment, crossover points and crossover filter slopes, for example. As a result, L-ACOUSTICS presets give the user an optimum starting point – system tuning should be done using band attenuation, subwoofer time alignment and system equalization using input section parametric filters – not by altering presets for the following reason:

Without proper instrumentation and spatial averaging, adjustments made at one location (e.g. the mix position) are not optimum at all other locations within the defined coverage pattern of the system. When made by ear, such adjustments are often misguided – the user may be in a local room mode (low frequency pressure maximum or minimum) and/or may be hearing a cancellation or addition due to crossover misalignment that sounds good at that specific location but what about all others? Meanwhile, the same result could have been achieved while preserving the power response of the system by using the correct crossover preset and a simple equalization cut or correct time alignment of subwoofers.

Preset libraries for XTA 224, 226 and BSS 366 are distributed via PCMCIA Card and are available from L-ACOUSTICS headquarters in France, L-ACOUSTICS US, L-ACOUSTICS UK or from your local L-ACOUSTICS distributor.

Preset libraries and upgrades can also be downloaded on www.l-acoustics.com.

3.3 GUIDELINES REGARDING SYSTEM PROTECTION

As standard, limit thresholds for XTA and BSS Processors are initially set at 3 dBu above the RMS power handling for both low and high sections of the 112XT, 115XT and 115XT HiQ as follows:

112XT low section : +6 dBu
112XT high section : +3 dBu

115XT low section : +6 dBu
115XT high section : +2 dBu

115XT HiQ low section : +8 dBu
115XT HiQ high section : +3 dBu

Amplifier input sensitivities (0 dB MLS switch setting) are as follows:

LA17a : +5.5 dBu

LA24a : +7.7 dBu

LA48a : +9.5 dBu

For the 112XT and 115XT low section, the +6 dBu limit threshold corresponds to twice the RMS power handling of the low section as well as the input sensitivity of the L-ACOUSTICS LA17a (+5.5 dBu) and LA 24a (+7.7 dBu) so that system protection is performed by a combination of the clip limiting circuits of the amplifier and the output channel limiters of the digital signal processor.

Note: L-ACOUSTICS recommends that LA power amplifier clip limiters be engaged at all times (CLIP switch depressed in the "IN" position).

L-ACOUSTICS LA amplifier clip limiters are sonically transparent and function by monitoring the output signal and comparing the distortion produced between the input and output of the amplifier. If the distortion exceeds 1% THD for any reason (voltage or current clipping), the limiter reduces the input signal proportionally (2 msec attack, 150 msec release). Under normal operation, clip limiting is inaudible and L-ACOUSTICS recommends leaving the Channel A and B clip limiters switched "on" (rear panel button depressed) at all times.

As seen in Sections 2.2, 2.3 and 2.4 additional protection can be obtained by using the following MLS switch settings for power matching of the amplifier output to the power handling capacity of the XT low and high sections:

	MLS SWITCH SETTING		
	LA17a	LA24a	LA48a
112XT LO SECTION	0 dB	-2 dB	-2 dB
112XT HI SECTION	0 dB	-2 dB	-4 dB

	MLS SWITCH SETTING		
	LA17a	LA24a	LA48a
115XT LO SECTION	0 dB	-2 dB	-4 dB
115XT HI SECTION	0 dB	-4 dB	-5 dB

	MLS SWITCH SETTING		
	LA17a	LA24a	LA48a
115XT HiQ LO SECTION	0 dB	-2 dB	-2 dB
115XT HiQ HI SECTION	0 dB	-2 dB	-4 dB

For the 112XT and 115XT HiQ or 115XT high section, the +3 dBu (112XT, 115XT HiQ) or +2 dBu (115XT) limit thresholds correspond to twice the RMS power handling of the high section and system protection is performed by the limiting circuitry of the digital signal processor.

Example: For the 112XT, the high section limit threshold is set to 3 dBu below the peak power handling in order to provide secure operation, i.e, the RMS power handling is 135 W, peak power handling is 540 W and assuming 32 dB amplifier gain, these power ratings correspond to limit thresholds of 0 dBu (135 W) and +6 dBu (540 W). As standard, the 112XT HF limiter threshold is set to +3 dBu (3 dB less than the peak power handling).

Standard HF limiter thresholds for the XT enclosures are suitable for most applications however the following adjustments can be made depending on the program content:

1) classical music - lots of transients, low RMS signal content
   increase standard HF limit threshold by 3 dB to correspond to the peak power handling
   (for example, 112XT HF limit threshold: +3 dBu -> +6 dBu)

2) rave/techno music - high RMS signal content, long duration
   decrease standard HF limit threshold by 3 dB to correspond to the RMS power handling
   (for example, 112XT HF limit threshold: +3 dBu -> 0 dBu)

NOTE: Setting limit thresholds to the amplifier input sensitivity (or the rated power handling of the section being driven) is important since this calibrates the output meter display of the crossover to correspond to either the amplifier clip point or the rated power handling. This gives the system operator a direct visual indication as to how hard the system is being operated.

3.4 XT PRESET LIBRARIES

As described in Section 3.1, three types of 2-way presets for XT enclosures are provided (FRONT, FILL and MONITOR) and two types of 3-way presets are available for the use of XT enclosures with L-ACOUSTICS SB115, SB118, SB218 or dV-SUB subwoofers (3W and 3WX).

All 2-way presets are configured in stereo 3-way mode, i.e., channel A and B Low/High outputs are on output channels 2 / 3 and 5 / 6, respectively (except for the BSS 336 Minidrive). This means that drive racks do not require recabling when changing from 3-way to 2-way presets. In addition, for 2-way presets, channels 1 and 4 are unlocked and available for programming of passive fill loudspeakers, subwoofers or, alternatively, for monitoring input equalization when using the SMAART or SPECTRAFOO measurement systems.

DSP OUTPUT CHANNEL	3W STEREO PRESET	2W STEREO PRESET
1	SUB(A)	
2	LO (A)	LO (A)
3	HI (A)	HI (A)
4	SUB (B)	
5	LO (B)	LO (B)
6	HI (B)	HI (B)

Note: for BSS FDS-366, 3 x 2-way presets are provided in memory locations 48-60. This channel configuration is recommended for 3 mix floor monitoring or Left/Centre/Right (LCR) applications.

Please refer to the appropriate Preset Description Sheet to assist in selecting the correct preset for your applications and as a reference for properly configuring crossover output channels for your drive rack or signal distribution system.

Preset Description Sheets (excel file format) are available for download from www.l-acoustics.com along with preset library data. As a quick reference, Figures 11-16 give channel assignments for XTA DP226, DP224 and BSS 334, 336, 366 and Lake Contour, respectively.

L-ACOUSTICS V7.2 PRESETS for XTA DP226

PRESET NAME	PGM TYPE	MEM	OUT 1 (Source)	OUT 2 (Source)	OUT 3 (Source)	OUT 4 (Source)	OUT 5 (Source)	OUT 6 (Source)
ARCS 2W LO	3-way stereo	10	FULL (A)	ARCS LOW (A)	ARCS HI (A)	FULL (B)	ARCS LOW (B)	ARCS HI (B)
ARCS 2W HI	3-way stereo	11	FULL (A)	ARCS LOW (A)	ARCS HI (A)	FULL (B)	ARCS LOW (B)	ARCS HI (B)
ARCS 3W SB118 LO	3-way stereo	12	SB118 (A)	ARCS LOW (A)	ARCS HI (A)	SB118 (B)	ARCS LOW (B)	ARCS HI (B)
ARCS 3W SB118 HI	3-way stereo	13	SB118 (A)	ARCS LOW (A)	ARCS HI (A)	SB118 (B)	ARCS LOW (B)	ARCS HI (B)
ARCS 3WX SB118 LO	3-way stereo	14	SB118 (A)	ARCS LOW (A)	ARCS HI (A)	SB118 (B)	ARCS LOW (B)	ARCS HI (B)
ARCS 3WX SB118 HI	3-way stereo	15	SB118 (A)	ARCS LOW (A)	ARCS HI (A)	SB118 (B)	ARCS LOW (B)	ARCS HI (B)
ARCS 3W SB218 LO	3-way stereo	16	SB218 (A)	ARCS LOW (A)	ARCS HI (A)	SB218 (B)	ARCS LOW (B)	ARCS HI (B)
ARCS 3W SB218 HI	3-way stereo	17	SB218 (A)	ARCS LOW (A)	ARCS HI (A)	SB218 (B)	ARCS LOW (B)	ARCS HI (B)
ARCS 3WX SB218 LO	3-way stereo	18	SB218 (A)	ARCS LOW (A)	ARCS HI (A)	SB218 (B)	ARCS LOW (B)	ARCS HI (B)
ARCS 3WX SB218 HI	3-way stereo	19	SB218 (A)	ARCS LOW (A)	ARCS HI (A)	SB218 (B)	ARCS LOW (B)	ARCS HI (B)
ARCS 3W dV-SUB LO	3-way stereo	20	dV-SUB (A)	ARCS LOW (A)	ARCS HI (A)	dV-SUB (B)	ARCS LOW (B)	ARCS HI (B)
ARCS 3W dV-SUB HI	3-way stereo	21	dV-SUB (A)	ARCS LOW (A)	ARCS HI (A)	dV-SUB (B)	ARCS LOW (B)	ARCS HI (B)
ARCS 3WX dV-SUB LO	3-way stereo	22	dV-SUB (A)	ARCS LOW (A)	ARCS HI (A)	dV-SUB (B)	ARCS LOW (B)	ARCS HI (B)
ARCS 3WX dV-SUB HI	3-way stereo	23	dV-SUB (A)	ARCS LOW (A)	ARCS HI (A)	dV-SUB (B)	ARCS LOW (B)	ARCS HI (B)
112XT 2W FILL	3-way stereo	24	FULL (A)	112XT LOW (A)	112XT HI (A)	FULL (B)	112XT LOW (B)	112XT HI (B)
112XT 2W FRONT	3-way stereo	25	FULL (A)	112XT LOW (A)	112XT HI (A)	FULL (B)	112XT LOW (B)	112XT HI (B)
112XT 2W MONITOR	3-way stereo (not linked)	26	FULL (A)	112XT LOW (A)	112XT HI (A)	FULL (B)	112XT LOW (B)	112XT HI (B)
112XT 3W SB118	3-way stereo	27	SB118 (A)	112XT LOW (A)	112XT HI (A)	SB118 (B)	112XT LOW (B)	112XT HI (B)
112XT 3WX SB118	3-way stereo	28	SB118 (A)	112XT LOW (A)	112XT HI (A)	SB118 (B)	112XT LOW (B)	112XT HI (B)
112XT 3W SB218	3-way stereo	29	SB218 (A)	112XT LOW (A)	112XT HI (A)	SB218 (B)	112XT LOW (B)	112XT HI (B)
112XT 3WX SB218	3-way stereo	30	SB218 (A)	112XT LOW (A)	112XT HI (A)	SB218 (B)	112XT LOW (B)	112XT HI (B)
112XT 3W dV-SUB	3-way stereo	31	dV-SUB (A)	112XT LOW (A)	112XT HI (A)	dV-SUB (B)	112XT LOW (B)	112XT HI (B)
112XT 3WX dV-SUB	3-way stereo	32	dV-SUB (A)	112XT LOW (A)	112XT HI (A)	dV-SUB (B)	112XT LOW (B)	112XT HI (B)
115XT 2W FILL	3-way stereo	33	FULL (A)	115XT LOW (A)	115XT HI (A)	FULL (B)	115XT LOW (B)	115XT HI (B)
115XT 2W FRONT	3-way stereo	34	FULL (A)	115XT LOW (A)	115XT HI (A)	FULL (B)	115XT LOW (B)	115XT HI (B)
115XT 2W MONITOR	3-way stereo (not linked)	35	FULL (A)	115XT LOW (A)	115XT HI (A)	FULL (B)	115XT LOW (B)	115XT HI (B)
115XT 3W SB118	3-way stereo	36	SB118 (A)	115XT LOW (A)	115XT HI (A)	SB118 (B)	115XT LOW (B)	115XT HI (B)
115XT 3WX SB118	3-way stereo	37	SB118 (A)	115XT LOW (A)	115XT HI (A)	SB118 (B)	115XT LOW (B)	115XT HI (B)
115XT 3W SB218	3-way stereo	38	SB218 (A)	115XT LOW (A)	115XT HI (A)	SB218 (B)	115XT LOW (B)	115XT HI (B)
115XT 3WX SB218	3-way stereo	39	SB218 (A)	115XT LOW (A)	115XT HI (A)	SB218 (B)	115XT LOW (B)	115XT HI (B)
115XT 3W dV-SUB	3-way stereo	40	dV-SUB (A)	115XT LOW (A)	115XT HI (A)	dV-SUB (B)	115XT LOW (B)	115XT HI (B)
115XT 3WX dV-SUB	3-way stereo	41	dV-SUB (A)	115XT LOW (A)	115XT HI (A)	dV-SUB (B)	115XT LOW (B)	115XT HI (B)
HiQ 2W FILL	3-way stereo	42	FULL (A)	115XT HiQ LOW (A)	115XT HiQ HI (A)	FULL (B)	115XT HiQ LOW (B)	115XT HiQ HI (B)
HiQ 2W FRONT	3-way stereo	43	FULL (A)	115XT HiQ LOW (A)	115XT HiQ HI (A)	FULL (B)	115XT HiQ LOW (B)	115XT HiQ HI (B)
HiQ 2W MONITOR	3-way stereo (not linked)	44	FULL (A)	115XT HiQ LOW (A)	115XT HiQ HI (A)	FULL (B)	115XT HiQ LOW (B)	115XT HiQ HI (B)
115FM 2W	3-way stereo (not linked)	45	FULL (A)	115FM LOW (A)	115FM HI (A)	FULL (B)	115FM LOW (B)	115FM HI (B)
115FM 2WX	3-way stereo (not linked)	46	FULL (A)	115FM LOW (A)	115FM HI (A)	FULL (B)	115FM LOW (B)	115FM HI (B)
115FM 3W SB118	3-way stereo	47	SB118 (A)	115FM LOW (A)	115FM HI (A)	SB118 (B)	115FM LOW (B)	115FM HI (B)
115FM 3W SB218	3-way stereo	48	SB218 (A)	115FM LOW (A)	115FM HI (A)	SB218 (B)	115FM LOW (B)	115FM HI (B)
115FM 3W dV-SUB	3-way stereo	49	dV-SUB (A)	115FM LOW (A)	115FM HI (A)	dV-SUB (B)	115FM LOW (B)	115FM HI (B)

Figure 11: L-ACOUSTICS preset library for XTA DP226

L-ACOUSTICS V7.2 PRESETS for XTA DP224

PRESET NAME	PGM TYPE	MEM	OUT 1 (Source)	OUT 2 (Source)	OUT 3 (Source)	OUT 4 (Source)
ARCS 2W LO	2-way stereo	10	ARCS LOW (A)	ARCS HI (A)	ARCS LOW (B)	ARCS HI (B)
ARCS 2W HI	2-way stereo	11	ARCS LOW (A)	ARCS HI (A)	ARCS LOW (B)	ARCS HI (B)
ARCS 3W SB118 LO	3-way (A) + 1 (B)	12	SB118 (A)	ARCS LOW (A)	ARCS HI (A)	SB118 (B)
ARCS 3W SB118 HI	3-way (A) + 1 (B)	13	SB118 (A)	ARCS LOW (A)	ARCS HI (A)	SB118 (B)
ARCS 3WX SB118 LO	3-way (A) + 1 (B)	14	SB118 (A)	ARCS LOW (A)	ARCS HI (A)	SB118 (B)
ARCS 3WX SB118 HI	3-way (A) + 1 (B)	15	SB118 (A)	ARCS LOW (A)	ARCS HI (A)	SB118 (B)
ARCS 3W SB218 LO	3-way (A) + 1 (B)	16	SB218 (A)	ARCS LOW (A)	ARCS HI (A)	SB218 (B)
ARCS 3W SB218 HI	3-way (A) + 1 (B)	17	SB218 (A)	ARCS LOW (A)	ARCS HI (A)	SB218 (B)
ARCS 3WX SB218 LO	3-way (A) + 1 (B)	18	SB218 (A)	ARCS LOW (A)	ARCS HI (A)	SB218 (B)
ARCS 3WX SB218 HI	3-way (A) + 1 (B)	19	SB218 (A)	ARCS LOW (A)	ARCS HI (A)	SB218 (B)
ARCS 3W dV-SUB LO	3-way (A) + 1 (B)	20	dV-SUB (A)	ARCS LOW (A)	ARCS HI (A)	dV-SUB (B)
ARCS 3W dV-SUB HI	3-way (A) + 1 (B)	21	dV-SUB (A)	ARCS LOW (A)	ARCS HI (A)	dV-SUB (B)
ARCS 3WX dV-SUB LO	3-way (A) + 1 (B)	22	dV-SUB (A)	ARCS LOW (A)	ARCS HI (A)	dV-SUB (B)
ARCS 3WX dV-SUB HI	3-way (A) + 1 (B)	23	dV-SUB (A)	ARCS LOW (A)	ARCS HI (A)	dV-SUB (B)
112XT 2W FILL	2-way stereo	24	112XT LOW (A)	112XT HI (A)	112XT LOW (B)	112XT HI (B)
112XT 2W FRONT	2-way stereo	25	112XT LOW (A)	112XT HI (A)	112XT LOW (B)	112XT HI (B)
112XT 2W MONITOR	2-way stereo (not linked)	26	112XT LOW (A)	112XT HI (A)	112XT LOW (B)	112XT HI (B)
112XT 3W SB118	3-way (A) + 1 (B)	27	SB118 (A)	112XT LOW (A)	112XT HI (A)	SB118 (B)
112XT 3WX SB118	3-way (A) + 1 (B)	28	SB118 (A)	112XT LOW (A)	112XT HI (A)	SB118 (B)
112XT 3W SB218	3-way (A) + 1 (B)	29	SB218 (A)	112XT LOW (A)	112XT HI (A)	SB218 (B)
112XT 3WX SB218	3-way (A) + 1 (B)	30	SB218 (A)	112XT LOW (A)	112XT HI (A)	SB218 (B)
112XT 3W dV-SUB	3-way (A) + 1 (B)	31	dV-SUB (A)	112XT LOW (A)	112XT HI (A)	dV-SUB (B)
112XT 3WX dV-SUB	3-way (A) + 1 (B)	32	dV-SUB (A)	112XT LOW (A)	112XT HI (A)	dV-SUB (B)
115XT 2W FILL	2-way stereo	33	115XT LOW (A)	115XT HI (A)	115XT LOW (B)	115XT HI (B)
115XT 2W FRONT	2-way stereo	34	115XT LOW (A)	115XT HI (A)	115XT LOW (B)	115XT HI (B)
115XT 2W MONITOR	2-way stereo (not linked)	35	115XT LOW (A)	115XT HI (A)	115XT LOW (B)	115XT HI (B)
115XT 3W SB118	3-way (A) + 1 (B)	36	SB118 (A)	115XT LOW (A)	115XT HI (A)	SB118 (B)
115XT 3WX SB118	3-way (A) + 1 (B)	37	SB118 (A)	115XT LOW (A)	115XT HI (A)	SB118 (B)
115XT 3W SB218	3-way (A) + 1 (B)	38	SB218 (A)	115XT LOW (A)	115XT HI (A)	SB218 (B)
115XT 3WX SB218	3-way (A) + 1 (B)	39	SB218 (A)	115XT LOW (A)	115XT HI (A)	SB218 (B)
115XT 3W dV-SUB	3-way (A) + 1 (B)	40	dV-SUB (A)	115XT LOW (A)	115XT HI (A)	dV-SUB (B)
115XT 3WX dV-SUB	3-way (A) + 1 (B)	41	dV-SUB (A)	115XT LOW (A)	115XT HI (A)	dV-SUB (B)
HiQ 2W FILL	2-way stereo	42	115XT HiQ LOW (A)	115XT HiQ HI (A)	115XT HiQ LOW (B)	115XT HiQ HI (B)
HiQ 2W FRONT	2-way stereo	43	115XT HiQ LOW (A)	115XT HiQ HI (A)	115XT HiQ LOW (B)	115XT HiQ HI (B)
HiQ 2W MONITOR	2-way stereo (not linked)	44	115XT HiQ LOW (A)	115XT HiQ HI (A)	115XT HiQ LOW (B)	115XT HiQ HI (B)
115FM 2W	2-way stereo (not linked)	45	115FM LO (A)	115FM HI (A)	115FM LO (B)	115FM HI (B)
115FM 2WX	2-way stereo (not linked)	46	115FM LO (A)	115FM HI (A)	115FM LO (B)	115FM HI (B)
115FM 3W SB118	3-way (A) + 1 (B)	47	SB118 (A)	115FM LOW (A)	115FM HI (A)	SB118 (B)
115FM 3W SB218	3-way (A) + 1 (B)	48	SB218 (A)	115FM LOW (A)	115FM HI (A)	SB218 (B)
115FM 3W dV-SUB	3-way (A) + 1 (B)	49	dV-SUB (A)	115FM LOW (A)	115FM HI (A)	dV-SUB (B)

Figure 12: L-ACOUSTICS preset library for XTA DP224

L-ACOUSTICS V7.2 PRESETS for BSS 334 MINIDRIVE

PRESET NAME	PGM TYPE	MEM	OUT 1 (Source)	OUT 2 (Source)	OUT 3 (Source)	OUT 4 (Source)
ARCS 2W LO	2-way stereo	1	ARCS LO (A)	ARCS LO (B)	ARCS HI (A)	ARCS HI (B)
ARCS 2W HI	2-way stereo	2	ARCS LO (A)	ARCS LO (B)	ARCS HI (A)	ARCS HI (B)
A 3W 118 LO	3-way (A) + SUB (B)	3	SB118 (A)	ARCS LO (A)	ARCS HI (A)	SB118 (B)
A 3W 118 HI	3-way (A) + SUB (B)	4	SB118 (A)	ARCS LO (A)	ARCS HI (A)	SB118 (B)
A 3WX 118 L	3-way (A) + SUB (B)	5	SB118 (A)	ARCS LO (A)	ARCS HI (A)	SB118 (B)
A 3WX 118 H	3-way (A) + SUB (B)	6	SB118 (A)	ARCS LO (A)	ARCS HI (A)	SB118 (B)
A 3W 218 LO	3-way (A) + SUB (B)	7	SB218 (A)	ARCS LO (A)	ARCS HI (A)	SB218 (B)
A 3W 218 HI	3-way (A) + SUB (B)	8	SB218 (A)	ARCS LO (A)	ARCS HI (A)	SB218 (B)
A 3WX 218 L	3-way (A) + SUB (B)	9	SB218 (A)	ARCS LO (A)	ARCS HI (A)	SB218 (B)
A 3WX 218 H	3-way (A) + SUB (B)	10	SB218 (A)	ARCS LO (A)	ARCS HI (A)	SB218 (B)
A 3W DVS LO	3-way (A) + SUB (B)	11	dV-SUB (A)	ARCS LO (A)	ARCS HI (A)	dV-SUB (B)
A 3W DVS HI	3-way (A) + SUB (B)	12	dV-SUB (A)	ARCS LO (A)	ARCS HI (A)	dV-SUB (B)
A 3WX DVS L	3-way (A) + SUB (B)	13	dV-SUB (A)	ARCS LO (A)	ARCS HI (A)	dV-SUB (B)
A 3WX DVS H	3-way (A) + SUB (B)	14	dV-SUB (A)	ARCS LO (A)	ARCS HI (A)	dV-SUB (B)
112XT FIL	2-way stereo	15	112XT LO (A)	112XT LO (B)	112XT HI (A)	112XT HI (B)
112XT FOH	2-way stereo	16	112XT LO (A)	112XT LO (B)	112XT HI (A)	112XT HI (B)
112XT MON	2-way stereo (not linked)	17	112XT LO (A)	112XT LO (B)	112XT HI (A)	112XT HI (B)
112 SB115	3-way (A) + SUB (B)	18	SB115 (A)	112XT LO (A)	112XT HI (A)	SB115 (B)
112 X 115	3-way (A) + SUB (B)	19	SB115 (A)	112XT LO (A)	112XT HI (A)	SB115 (B)
112 SB118	3-way (A) + SUB (B)	20	SB118 (A)	112XT LO (A)	112XT HI (A)	SB118 (B)
112 X 118	3-way (A) + SUB (B)	21	SB118 (A)	112XT LO (A)	112XT HI (A)	SB118 (B)
112 SB218	3-way (A) + SUB (B)	22	SB218 (A)	112XT LO (A)	112XT HI (A)	SB218 (B)
112 X 218	3-way (A) + SUB (B)	23	SB218 (A)	112XT LO (A)	112XT HI (A)	SB218 (B)
112 DVSUB	3-way (A) + SUB (B)	24	dV-SUB (A)	112XT LO (A)	112XT HI (A)	dV-SUB (B)
112 X dVS	3-way (A) + SUB (B)	25	dV-SUB (A)	112XT LO (A)	112XT HI (A)	dV-SUB (B)
115XT FIL	2-way stereo	26	115XT LO (A)	115XT LO (B)	115XT HI (A)	115XT HI (B)
115XT FOH	2-way stereo	27	115XT LO (A)	115XT LO (B)	115XT HI (A)	115XT HI (B)
115XT MON	2-way stereo (not linked)	28	115XT LO (A)	115XT LO (B)	115XT HI (A)	115XT HI (B)
115 SB115	3-way (A) + SUB (B)	29	SB115 (A)	115XT LO (A)	115XT HI (A)	SB115 (B)
115 X 115	3-way (A) + SUB (B)	30	SB115 (A)	115XT LO (A)	115XT HI (A)	SB115 (B)
115 SB118	3-way (A) + SUB (B)	31	SB118 (A)	115XT LO (A)	115XT HI (A)	SB118 (B)
115 X 118	3-way (A) + SUB (B)	32	SB118 (A)	115XT LO (A)	115XT HI (A)	SB118 (B)
115 SB218	3-way (A) + SUB (B)	33	SB218 (A)	115XT LO (A)	115XT HI (A)	SB218 (B)
115 X 218	3-way (A) + SUB (B)	34	SB218 (A)	115XT LO (A)	115XT HI (A)	SB218 (B)
115 DVSUB	3-way (A) + SUB (B)	35	dV-SUB (A)	115XT LO (A)	115XT HI (A)	dV-SUB (B)
115 X dVS	3-way (A) + SUB (B)	36	dV-SUB (A)	115XT LO (A)	115XT HI (A)	dV-SUB (B)
HiQ FILL	2-way stereo	37	115XT HiQ LO (A)	115XT HiQ LO (B)	115XT HiQ HI (A)	115XT HiQ HI (B)
HiQ FOH	2-way stereo	38	115XT HiQ LO (A)	115XT HiQ LO (B)	115XT HiQ HI (A)	115XT HiQ HI (B)
HiQ MON	2-way stereo (not linked)	39	115XT HiQ LO (A)	115XT HiQ LO (B)	115XT HiQ HI (A)	115XT HiQ HI (B)
115FM 2W	2-way stereo (not linked)	40	115FM LO (A)	115FM LO (B)	115FM HI (A)	115FM HI (B)
115FM 2WX	2-way stereo (not linked)	41	115FM LO (A)	115FM LO (B)	115FM HI (A)	115FM HI (B)
FM SB115	3-way (A) + SUB (B)	42	SB115 (A)	115FM LO (A)	115FM HI (A)	SB115 (B)
FM SB118	3-way (A) + SUB (B)	43	SB118 (A)	115FM LO (A)	115FM HI (A)	SB118 (B)
FM SB218	3-way (A) + SUB (B)	44	SB218 (A)	115FM LO (A)	115FM HI (A)	SB218 (B)
FM dVSUB	3-way (A) + SUB (B)	45	dV-SUB (A)	115FM LO (A)	115FM HI (A)	dV-SUB (B)

Figure 13: L-ACOUSTICS preset library for BSS FDS-334 Minidrive

L-ACOUSTICS V7.2 PRESETS for BSS 336 MINIDRIVE

PRESET NAME	PGM TYPE	Mem	OUT 1 (Source)	OUT 2 (Source)	OUT 3 (Source)	OUT 4 (Source)	OUT 5 (Source)	OUT 6 (Source)
ARCS 2W LO	3(A)+3(B)	1	FULL (A)	FULL (B)	ARCS LOW (A)	ARCS LOW (B)	ARCS HI (A)	ARCS HI (B)
ARCS 2W HI	3(A)+3(B)	2	FULL (A)	FULL (B)	ARCS LOW (A)	ARCS LOW (B)	ARCS HI (A)	ARCS HI (B)
A 3W 118 LO	3(A)+3(B)	3	SB118 (A)	SB118 (B)	ARCS LOW (A)	ARCS LOW (B)	ARCS HI (A)	ARCS HI (B)
A 3W 118 HI	3(A)+3(B)	4	SB118 (A)	SB118 (B)	ARCS LOW (A)	ARCS LOW (B)	ARCS HI (A)	ARCS HI (B)
A 3WX 118 L	3(A)+3(B)	5	SB118 (A)	SB118 (B)	ARCS LOW (A)	ARCS LOW (B)	ARCS HI (A)	ARCS HI (B)
A 3WX 118 H	3(A)+3(B)	6	SB118 (A)	SB118 (B)	ARCS LOW (A)	ARCS LOW (B)	ARCS HI (A)	ARCS HI (B)
A 3W 218 LO	3(A)+3(B)	7	SB218 (A)	SB218 (B)	ARCS LOW (A)	ARCS LOW (B)	ARCS HI (A)	ARCS HI (B)
A 3W 218 HI	3(A)+3(B)	8	SB218 (A)	SB218 (B)	ARCS LOW (A)	ARCS LOW (B)	ARCS HI (A)	ARCS HI (B)
A 3WX 218 L	3(A)+3(B)	9	SB218 (A)	SB218 (B)	ARCS LOW (A)	ARCS LOW (B)	ARCS HI (A)	ARCS HI (B)
A 3WX 218 H	3(A)+3(B)	10	SB218 (A)	SB218 (B)	ARCS LOW (A)	ARCS LOW (B)	ARCS HI (A)	ARCS HI (B)
A 3W DVS LO	3(A)+3(B)	11	dV-SUB (A)	dV-SUB (B)	ARCS LOW (A)	ARCS LOW (B)	ARCS HI (A)	ARCS HI (B)
A 3W DVS HI	3(A)+3(B)	12	dV-SUB (A)	dV-SUB (B)	ARCS LOW (A)	ARCS LOW (B)	ARCS HI (A)	ARCS HI (B)
A 3WX DVS L	3(A)+3(B)	13	dV-SUB (A)	dV-SUB (B)	ARCS LOW (A)	ARCS LOW (B)	ARCS HI (A)	ARCS HI (B)
A 3WX DVS H	3(A)+3(B)	14	dV-SUB (A)	dV-SUB (B)	ARCS LOW (A)	ARCS LOW (B)	ARCS HI (A)	ARCS HI (B)
112XT FIL	3(A)+3(B)	15	FULL (A)	FULL (B)	112XT LOW (A)	112XT LOW (B)	112XT HI (A)	112XT HI (B)
112XT FOH	3(A)+3(B)	16	FULL (A)	FULL (B)	112XT LOW (A)	112XT LOW (B)	112XT HI (A)	112XT HI (B)
112XT MON	3(A)+3(B)	17	FULL (A)	FULL (B)	112XT LOW (A)	112XT LOW (B)	112XT HI (A)	112XT HI (B)
112 SB115	3(A)+3(B)	18	SB115 (A)	SB115 (B)	112XT LOW (A)	112XT LOW (B)	112XT HI (A)	112XT HI (B)
112 X 115	3(A)+3(B)	19	SB115 (A)	SB115 (B)	112XT LOW (A)	112XT LOW (B)	112XT HI (A)	112XT HI (B)
112 SB118	3(A)+3(B)	20	SB118 (A)	SB118 (B)	112XT LOW (A)	112XT LOW (B)	112XT HI (A)	112XT HI (B)
112 X 118	3(A)+3(B)	21	SB118 (A)	SB118 (B)	112XT LOW (A)	112XT LOW (B)	112XT HI (A)	112XT HI (B)
112 SB218	3(A)+3(B)	22	SB218 (A)	SB218 (B)	112XT LOW (A)	112XT LOW (B)	112XT HI (A)	112XT HI (B)
112 X 218	3(A)+3(B)	23	SB218 (A)	SB218 (B)	112XT LOW (A)	112XT LOW (B)	112XT HI (A)	112XT HI (B)
112 DVSUB	3(A)+3(B)	24	dV-SUB (A)	dV-SUB (B)	112XT LOW (A)	112XT LOW (B)	112XT HI (A)	112XT HI (B)
112 X dVS	3(A)+3(B)	25	dV-SUB (A)	dV-SUB (B)	112XT LOW (A)	112XT LOW (B)	112XT HI (A)	112XT HI (B)
115XT FIL	3(A)+3(B)	26	FULL (A)	FULL (B)	115XT LOW (A)	115XT LOW (B)	115XT HI (A)	115XT HI (B)
115XT FOH	3(A)+3(B)	27	FULL (A)	FULL (B)	115XT LOW (A)	115XT LOW (B)	115XT HI (A)	115XT HI (B)
115XT MON	3(A)+3(B)	28	FULL (A)	FULL (B)	115XT LOW (A)	115XT LOW (B)	115XT HI (A)	115XT HI (B)
115 SB115	3(A)+3(B)	29	SB115 (A)	SB115 (B)	115XT LOW (A)	115XT LOW (B)	115XT HI (A)	115XT HI (B)
115 X 115	3(A)+3(B)	30	SB115 (A)	SB115 (B)	115XT LOW (A)	115XT LOW (B)	115XT HI (A)	115XT HI (B)
115 SB118	3(A)+3(B)	31	SB118 (A)	SB118 (B)	115XT LOW (A)	115XT LOW (B)	115XT HI (A)	115XT HI (B)
115 X 118	3(A)+3(B)	32	SB118 (A)	SB118 (B)	115XT LOW (A)	115XT LOW (B)	115XT HI (A)	115XT HI (B)
115 SB218	3(A)+3(B)	33	SB218 (A)	SB218 (B)	115XT LOW (A)	115XT LOW (B)	115XT HI (A)	115XT HI (B)
115 X 218	3(A)+3(B)	34	SB218 (A)	SB218 (B)	115XT LOW (A)	115XT LOW (B)	115XT HI (A)	115XT HI (B)
115 DVSUB	3(A)+3(B)	35	dV-SUB (A)	dV-SUB (B)	115XT LOW (A)	115XT LOW (B)	115XT HI (A)	115XT HI (B)
115 X dVS	3(A)+3(B)	36	dV-SUB (A)	dV-SUB (B)	115XT LOW (A)	115XT LOW (B)	115XT HI (A)	115XT HI (B)
HiQ FILL	3(A)+3(B)	37	FULL (A)	FULL (B)	115XT HiQ LOW (A)	115XT HiQ LOW (B)	115XT HiQ HI (A)	115XT HiQ HI (B)
HiQ FOH	3(A)+3(B)	38	FULL (A)	FULL (B)	115XT HiQ LOW (A)	115XT HiQ LOW (B)	115XT HiQ HI (A)	115XT HiQ HI (B)
HiQ MON	3(A)+3(B)	39	FULL (A)	FULL (B)	115XT HiQ LOW (A)	115XT HiQ LOW (B)	115XT HiQ HI (A)	115XT HiQ HI (B)
115FM 2W	3(A)+3(B)	40	FULL (A)	FULL (B)	115FM LOW (A)	115FM LOW (B)	115FM HI (A)	115FM HI (B)
115FM 2WX	3(A)+3(B)	41	FULL (A)	FULL (B)	115FM LOW (A)	115FM LOW (B)	115FM HI (A)	115FM HI (B)
FM SB115	3(A)+3(B)	42	SB115 (A)	SB115 (B)	115FM LOW (A)	115FM LOW (B)	115FM HI (A)	115FM HI (B)
FM SB118	3(A)+3(B)	43	SB118 (A)	SB118 (B)	115FM LOW (A)	115FM LOW (B)	115FM HI (A)	115FM HI (B)
FM SB218	3(A)+3(B)	44	SB218 (A)	SB218 (B)	115FM LOW (A)	115FM LOW (B)	115FM HI (A)	115FM HI (B)
FM dVSUB	3(A)+3(B)	45	dV-SUB (A)	dV-SUB (B)	115FM LOW (A)	115FM LOW (B)	115FM HI (A)	115FM HI (B)

Figure 14: L-ACOUSTICS preset library for BSS FDS-336 Minidrive

L-ACOUSTICS V7.1 PRESET MODULES for LAKE CONTOUR

	OUT 1 (Source)	OUT 2 (Source)	OUT 3 (Source)	OUT 4 (Source)	OUT 5 (Source)	OUT 6 (Source)
2-WAY MODULES						
ARCS 2W LO	ARCS LO (A)	ARCS HI (A)	FULL (A)	ARCS LO (B)	ARCS HI (B)	FULL (B)
ARCS 2W HI	ARCS LO (A)	ARCS HI (A)	FULL (A)	ARCS LO (B)	ARCS HI (B)	FULL (B)
112XT FILL	112XT LO (A)	112XT HI (A)	FULL (A)	112XT LO (B)	112XT HI (B)	FULL (B)
112XT FRONT	112XT LO (A)	112XT HI (A)	FULL (A)	112XT LO (B)	112XT HI (B)	FULL (B)
112XT MONITOR	112XT LO (A)	112XT HI (A)	FULL (A)	112XT LO (B)	112XT HI (B)	FULL (B)
115XT FILL	115XT LO (A)	115XT HI (A)	FULL (A)	115XT LO (B)	115XT HI (B)	FULL (B)
115XT FRONT	115XT LO (A)	115XT HI (A)	FULL (A)	115XT LO (B)	115XT HI (B)	FULL (B)
115XT MONITOR	115XT LO (A)	115XT HI (A)	FULL (A)	115XT LO (B)	115XT HI (B)	FULL (B)
115XT HiQ FILL	115XT HiQ LO (A)	115XT HiQ HI (A)	FULL (A)	115XT HiQ LO (B)	115XT HiQ HI (B)	FULL (B)
115XT HiQ FRONT	115XT HiQ LO (A)	115XT HiQ HI (A)	FULL (A)	115XT HiQ LO (B)	115XT HiQ HI (B)	FULL (B)
3-WAY MODULES						
ARCS 3W SB118 LO	SB118 (A)	ARCS LO (A)	ARCS HI (A)	SB118 (B)	ARCS LO (B)	ARCS HI (B)
ARCS 3W SB118 HI	SB118 (A)	ARCS LO (A)	ARCS HI (A)	SB118 (B)	ARCS LO (B)	ARCS HI (B)
ARCS 3WX SB118 LO	SB118 (A)	ARCS LO (A)	ARCS HI (A)	SB118 (B)	ARCS LO (B)	ARCS HI (B)
ARCS 3WX SB118 HI	SB118 (A)	ARCS LO (A)	ARCS HI (A)	SB118 (B)	ARCS LO (B)	ARCS HI (B)
ARCS 3W SB218 LO	SB218 (A)	ARCS LO (A)	ARCS HI (A)	SB218 (B)	ARCS LO (B)	ARCS HI (B)
ARCS 3W SB218 HI	SB218 (A)	ARCS LO (A)	ARCS HI (A)	SB218 (B)	ARCS LO (B)	ARCS HI (B)
ARCS 3WX SB218 LO	SB218 (A)	ARCS LO (A)	ARCS HI (A)	SB218 (B)	ARCS LO (B)	ARCS HI (B)
ARCS 3WX SB218 HI	SB218 (A)	ARCS LO (A)	ARCS HI (A)	SB218 (B)	ARCS LO (B)	ARCS HI (B)
ARCS 3W dV-SUB LO	dV-SUB (A)	ARCS LO (A)	ARCS HI (A)	dV-SUB (B)	ARCS LO (B)	ARCS HI (B)
ARCS 3W dV-SUB HI	dV-SUB (A)	ARCS LO (A)	ARCS HI (A)	dV-SUB (B)	ARCS LO (B)	ARCS HI (B)
ARCS 3WX dV-SUB LO	dV-SUB (A)	ARCS LO (A)	ARCS HI (A)	dV-SUB (B)	ARCS LO (B)	ARCS HI (B)
ARCS 3WX dV-SUB HI	dV-SUB (A)	ARCS LO (A)	ARCS HI (A)	dV-SUB (B)	ARCS LO (B)	ARCS HI (B)
112XT 3W SB118	SB118 (A)	112XT LO (A)	112XT HI (A)	SB118 (B)	112XT LO (B)	112XT HI (B)
112XT 3WX SB118	SB118 (A)	112XT LO (A)	112XT HI (A)	SB118 (B)	112XT LO (B)	112XT HI (B)
112XT 3W SB218	SB218 (A)	112XT LO (A)	112XT HI (A)	SB218 (B)	112XT LO (B)	112XT HI (B)
112XT 3WX SB218	SB218 (A)	112XT LO (A)	112XT HI (A)	SB218 (B)	112XT LO (B)	112XT HI (B)
112XT 3W dV-SUB	dV-SUB (A)	112XT LO (A)	112XT HI (A)	dV-SUB (B)	112XT LO (B)	112XT HI (B)
112XT 3WX dV-SUB	dV-SUB (A)	112XT LO (A)	112XT HI (A)	dV-SUB (B)	112XT LO (B)	112XT HI (B)
115XT 3W SB118	SB118 (A)	115XT LO (A)	115XT HI (A)	SB118 (B)	115XT LO (B)	115XT HI (B)
115XT 3WX SB118	SB118 (A)	115XT LO (A)	115XT HI (A)	SB118 (B)	115XT LO (B)	115XT HI (B)
115XT 3W SB218	SB218 (A)	115XT LO (A)	115XT HI (A)	SB218 (B)	115XT LO (B)	115XT HI (B)
115XT 3WX SB218	SB218 (A)	115XT LO (A)	115XT HI (A)	SB218 (B)	115XT LO (B)	115XT HI (B)
115XT 3W dV-SUB	dV-SUB (A)	115XT LO (A)	115XT HI (A)	dV-SUB (B)	115XT LO (B)	115XT HI (B)
115XT 3WX dV-SUB	dV-SUB (A)	115XT LO (A)	115XT HI (A)	dV-SUB (B)	115XT LO (B)	115XT HI (B)

+2 MODULES (OUTPUTS 5/6)		
AUX	FULL (B)	FULL (B)
ARCS 2W LO	ARCS LO (B)	ARCS HI (B)
ARCS 2W HI	ARCS LO (B)	ARCS HI (B)
112XT FILL	112XT LO (B)	112XT HI (B)
112XT FRONT	112XT LO (B)	112XT HI (B)
115XT FILL	115XT LO (B)	115XT HI (B)
115XT FRONT	115XT LO (B)	115XT HI (B)
115XT HiQ FILL	115XT HiQ LO (B)	115XT HiQ HI (B)
115XT HiQ FRONT	115XT HiQ LO (B)	115XT HiQ HI (B)

Figure 15: L-ACOUSTICS modules for Lake Contour

L-ACOUSTICS V7.2 PRESETS for BSS 366 *

PRESET NAME	PGM TYPE	Mem	OUT 1 (Source)	OUT 2 (Source)	OUT 3 (Source)	OUT 4 (Source)	OUT 5 (Source)	OUT 6 (Source)
USER	3(A)+3(B)	1						
ARCS 2W LO	3(A)+3(B)	2	FULL (A)	ARCS LOW (A)	ARCS HI (A)	FULL (B)	ARCS LOW (B)	ARCS HI (B)
ARCS 2W HI	3(A)+3(B)	3	FULL (A)	ARCS LOW (A)	ARCS HI (A)	FULL (B)	ARCS LOW (B)	ARCS HI (B)
A 3W 118 LO	3(A)+3(B)	4	SB118 (A)	ARCS LOW (A)	ARCS HI (A)	SB118 (B)	ARCS LOW (B)	ARCS HI (B)
A 3W 118 HI	3(A)+3(B)	5	SB118 (A)	ARCS LOW (A)	ARCS HI (A)	SB118 (B)	ARCS LOW (B)	ARCS HI (B)
A 3WX 118 L	3(A)+3(B)	6	SB118 (A)	ARCS LOW (A)	ARCS HI (A)	SB118 (B)	ARCS LOW (B)	ARCS HI (B)
A 3WX 118 H	3(A)+3(B)	7	SB118 (A)	ARCS LOW (A)	ARCS HI (A)	SB118 (B)	ARCS LOW (B)	ARCS HI (B)
A 3W 218 LO	3(A)+3(B)	8	SB218 (A)	ARCS LOW (A)	ARCS HI (A)	SB218 (B)	ARCS LOW (B)	ARCS HI (B)
A 3W 218 HI	3(A)+3(B)	9	SB218 (A)	ARCS LOW (A)	ARCS HI (A)	SB218 (B)	ARCS LOW (B)	ARCS HI (B)
A 3WX 218 L	3(A)+3(B)	10	SB218 (A)	ARCS LOW (A)	ARCS HI (A)	SB218 (B)	ARCS LOW (B)	ARCS HI (B)
A 3WX 218 H	3(A)+3(B)	11	SB218 (A)	ARCS LOW (A)	ARCS HI (A)	SB218 (B)	ARCS LOW (B)	ARCS HI (B)
A 3W DVS LO	3(A)+3(B)	12	dV-SUB (A)	ARCS LOW (A)	ARCS HI (A)	dV-SUB (B)	ARCS LOW (B)	ARCS HI (B)
A 3W DVS HI	3(A)+3(B)	13	dV-SUB (A)	ARCS LOW (A)	ARCS HI (A)	dV-SUB (B)	ARCS LOW (B)	ARCS HI (B)
A 3WX DVS L	3(A)+3(B)	14	dV-SUB (A)	ARCS LOW (A)	ARCS HI (A)	dV-SUB (B)	ARCS LOW (B)	ARCS HI (B)
A 3WX DVS H	3(A)+3(B)	15	dV-SUB (A)	ARCS LOW (A)	ARCS HI (A)	dV-SUB (B)	ARCS LOW (B)	ARCS HI (B)
112XT FIL	3(A)+3(B)	16	FULL (A)	112XT LOW (A)	112XT HI (A)	FULL (B)	112XT LOW (B)	112XT HI (B)
112XT FOH	3(A)+3(B)	17	FULL (A)	112XT LOW (A)	112XT HI (A)	FULL (B)	112XT LOW (B)	112XT HI (B)
112XT MON	3(A)+3(B)	18	FULL (A)	112XT LOW (A)	112XT HI (A)	FULL (B)	112XT LOW (B)	112XT HI (B)
112 SB115	3(A)+3(B)	19	SB115 (A)	112XT LOW (A)	112XT HI (A)	SB115 (B)	112XT LOW (B)	112XT HI (B)
112 X 115	3(A)+3(B)	20	SB115 (A)	112XT LOW (A)	112XT HI (A)	SB115 (B)	112XT LOW (B)	112XT HI (B)
112 SB118	3(A)+3(B)	21	SB118 (A)	112XT LOW (A)	112XT HI (A)	SB118 (B)	112XT LOW (B)	112XT HI (B)
112 X 118	3(A)+3(B)	22	SB118 (A)	112XT LOW (A)	112XT HI (A)	SB118 (B)	112XT LOW (B)	112XT HI (B)
112 SB218	3(A)+3(B)	23	SB218 (A)	112XT LOW (A)	112XT HI (A)	SB218 (B)	112XT LOW (B)	112XT HI (B)
112 X 218	3(A)+3(B)	24	SB218 (A)	112XT LOW (A)	112XT HI (A)	SB218 (B)	112XT LOW (B)	112XT HI (B)
112 dVS	3(A)+3(B)	25	dV-SUB (A)	112XT LOW (A)	112XT HI (A)	dV-SUB (B)	112XT LOW (B)	112XT HI (B)
112 X dVS	3(A)+3(B)	26	dV-SUB (A)	112XT LOW (A)	112XT HI (A)	dV-SUB (B)	112XT LOW (B)	112XT HI (B)
115XT FIL	3(A)+3(B)	27	FULL (A)	115XT LOW (A)	115XT HI (A)	FULL (B)	115XT LOW (B)	115XT HI (B)
115XT FOH	3(A)+3(B)	28	FULL (A)	115XT LOW (A)	115XT HI (A)	FULL (B)	115XT LOW (B)	115XT HI (B)
115XT MON	3(A)+3(B)	29	FULL (A)	115XT LOW (A)	115XT HI (A)	FULL (B)	115XT LOW (B)	115XT HI (B)
115 SB115	3(A)+3(B)	30	SB115 (A)	115XT LOW (A)	115XT HI (A)	SB115 (B)	115XT LOW (B)	115XT HI (B)
115 X 115	3(A)+3(B)	31	SB115 (A)	115XT LOW (A)	115XT HI (A)	SB115 (B)	115XT LOW (B)	115XT HI (B)
115 SB118	3(A)+3(B)	32	SB118 (A)	115XT LOW (A)	115XT HI (A)	SB118 (B)	115XT LOW (B)	115XT HI (B)
115 X 118	3(A)+3(B)	33	SB118 (A)	115XT LOW (A)	115XT HI (A)	SB118 (B)	115XT LOW (B)	115XT HI (B)
115 SB218	3(A)+3(B)	34	SB218 (A)	115XT LOW (A)	115XT HI (A)	SB218 (B)	115XT LOW (B)	115XT HI (B)
115 X 218	3(A)+3(B)	35	SB218 (A)	115XT LOW (A)	115XT HI (A)	SB218 (B)	115XT LOW (B)	115XT HI (B)
115 dVS	3(A)+3(B)	36	dV-SUB (A)	115XT LOW (A)	115XT HI (A)	dV-SUB (B)	115XT LOW (B)	115XT HI (B)
115 X dVS	3(A)+3(B)	37	dV-SUB (A)	115XT LOW (A)	115XT HI (A)	dV-SUB (B)	115XT LOW (B)	115XT HI (B)
HiQ FILL	3(A)+3(B)	38	FULL (A)	115XT HiQ LOW (A)	115XT HiQ HI (A)	FULL (B)	115XT HiQ LOW (B)	115XT HiQ HI (B)
HiQ FOH	3(A)+3(B)	39	FULL (A)	115XT HiQ LOW (A)	115XT HiQ HI (A)	FULL (B)	115XT HiQ LOW (B)	115XT HiQ HI (B)
HiQ MON	3(A)+3(B)	40	FULL (A)	115XT HiQ LOW (A)	115XT HiQ HI (A)	FULL (B)	115XT HiQ LOW (B)	115XT HiQ HI (B)
115FM 2W	3(A)+3(B)	41	FULL (A)	115FM LOW (A)	115FM HI (A)	FULL (B)	115FM LO (B)	115FM HI (B)
115FM 2WX	3(A)+3(B)	42	FULL (A)	115FM LOW (A)	115FM HI (A)	FULL (B)	115FM LO (B)	115FM HI (B)
FM SB115	3(A)+3(B)	43	SB115 (A)	115FM LOW (A)	115FM HI (A)	SB115 (B)	115FM LOW (B)	115FM HI (B)
FM SB118	3(A)+3(B)	44	SB118 (A)	115FM LOW (A)	115FM HI (A)	SB118 (B)	115FM LOW (B)	115FM HI (B)
FM SB218	3(A)+3(B)	45	SB218 (A)	115FM LOW (A)	115FM HI (A)	SB218 (B)	115FM LOW (B)	115FM HI (B)
FM dVSUB	3(A)+3(B)	46	dV-SUB (A)	115FM LOW (A)	115FM HI (A)	dV-SUB (B)	115FM LOW (B)	115FM HI (B)
		47	INTENTIONALLY BLANK (3 x 2-way presets follow)					
ARCS 2W LO	2(A)+2(B)+2(C)	48	ARCS LOW (A)	ARCS HI (A)	ARCS LOW (B)	ARCS HI (B)	ARCS LOW (C)	ARCS HI (C)
ARCS 2W HI	2(A)+2(B)+2(C)	49	ARCS LOW (A)	ARCS HI (A)	ARCS LOW (B)	ARCS HI (B)	ARCS LOW (C)	ARCS HI (C)
HiQ FILL	2(A)+2(B)+2(C)	50	115XT HiQ LOW (A)	115XT HiQ HI (A)	115XT HiQ LOW (B)	115XT HiQ HI (B)	115XT HiQ LOW (C)	115XT HiQ HI (C)
HiQ FOH	2(A)+2(B)+2(C)	51	115XT HiQ LOW (A)	115XT HiQ HI (A)	115XT HiQ LOW (B)	115XT HiQ HI (B)	115XT HiQ LOW (C)	115XT HiQ HI (C)
HiQ MON	2(A)+2(B)+2(C)	52	115XT HiQ LOW (A)	115XT HiQ HI (A)	115XT HiQ LOW (B)	115XT HiQ HI (B)	115XT HiQ LOW (C)	115XT HiQ HI (C)
115FM 2W	2(A)+2(B)+2(C)	53	115FM LOW (A)	115FM HI (A)	115FM LOW (B)	115FM HI (B)	115FM LOW (C)	115FM HI (C)
115FM 2WX	2(A)+2(B)+2(C)	54	115FM LOW (A)	115FM HI (A)	115FM LOW (B)	115FM HI (B)	115FM LOW (C)	115FM HI (C)
112XT FIL	2(A)+2(B)+2(C)	55	112XT LOW (A)	112XT HI (A)	112XT LOW (B)	112XT HI (B)	112XT LOW (C)	112XT HI (C)
112XT FOH	2(A)+2(B)+2(C)	56	112XT LOW (A)	112XT HI (A)	112XT LOW (B)	112XT HI (B)	112XT LOW (C)	112XT HI (C)
112XT MON	2(A)+2(B)+2(C)	57	112XT LOW (A)	112XT HI (A)	112XT LOW (B)	112XT HI (B)	112XT LOW (C)	112XT HI (C)
115XT FIL	2(A)+2(B)+2(C)	58	115XT LOW (A)	115XT HI (A)	115XT LOW (B)	115XT HI (B)	115XT LOW (C)	115XT HI (C)
115XT FOH	2(A)+2(B)+2(C)	59	115XT LOW (A)	115XT HI (A)	115XT LOW (B)	115XT HI (B)	115XT LOW (C)	115XT HI (C)
115XT MON	2(A)+2(B)+2(C)	60	115XT LOW (A)	115XT HI (A)	115XT LOW (B)	115XT HI (B)	115XT LOW (C)	115XT HI (C)

***L-ACOUSTICS V7.2 PRESETS MUST BE USED WITH BSS 366 VERSION 1.10 FIRMWARE (OR HIGHER)**

Figure 16: L-ACOUSTICS preset library for BSS FDS-366 Omnidrive Compact Plus

4. SOUND DESIGN

4.1 APPLICATIONS

The art of designing a sound system is a profession in itself and a complete description of all sound system design aspects is beyond the scope of this manual. If necessary, we recommend the use of a specialized sound engineer or consultant since *the best products can produce the worst results if improperly set-up.* In order to get the best results, it is important to follow correct sound design principles, properly integrate your XT enclosures with subwoofers, employ the correct power amplification and cabling along with the correct OEM preset.

In general terms, 112XT, 115XT and 115XT HiQ enclosures are intended for distributed sound reinforcement for small to medium-scale Front-Of-House (FOH) applications. FOH applications include: theatres, clubs, multi-purpose venues or corporate events. Examples of distributed systems include delay rings for fixed installation, surround effects channels for theatre or multimedia, distributed reinforcement for sports venues or delays for speech reinforcement. For touring sound applications, XT loudspeakers provide a high performance distributed front fill system solution to complement main FOH system coverage.

Although optimized for single operation, XT loudspeakers can be used in vertical arrays of two enclosures to enhance vertical coverage – for example, in theatre applications where one XT enclosure provides balcony coverage while the second provides floor coverage.

Due to their compact, wedge-shaped format and axi-symmetrical directivity, XT enclosures provide an exceptionally high performance floor monitor solution – particularly the 115XT HiQ which has been specifically optimized for touring applications. When used in conjunction with L-ACOUSTICS SB115, SB118, SB218 or dV-SUB subwoofers, 112XT, 115XT or 115XT HiQ enclosures are also suitable for side fill and drum monitoring applications.

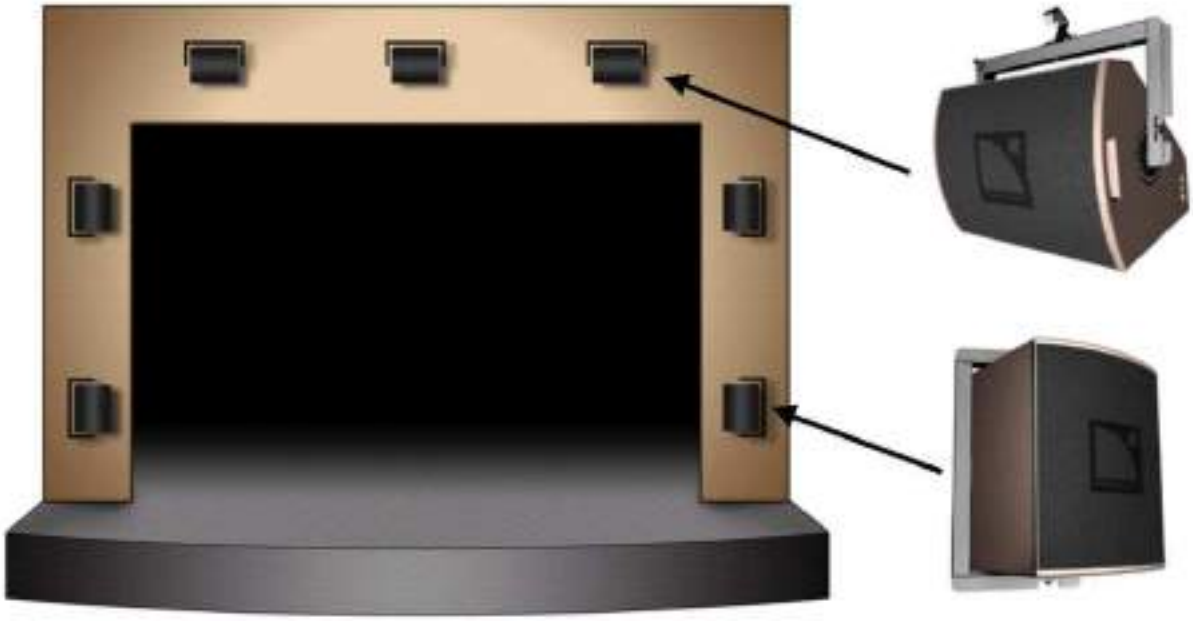

Figure 17: Theatre Sound Design Example (LCR array, proscenium-mounted LR loudspeakers for floor and centre balcony coverage, optional distributed front fill system not shown)

4.2 AIMING XT ENCLOSURES

Due to their controlled directivity behavior, XT enclosures should be aimed so as to geometrically cover the desired audience area with the main zero degree axis orientated towards the middle or rear of the audience area. Since the wavefront radiated by an axi-symmetric sound source has directivity that is smoothly increasing with frequency, this helps to match coverage, frequency response and SPL to the acoustic environment of a typical auditorium. Normally, the reverberation time in auditoria decreases smoothly above 1 kHz and at greater distances in the venue, the low frequency energy is fairly constant due to the reverberant field.

Loudspeaker focus or aiming should be adjusted so that maximum HF energy is directed towards the farthest listening areas – this helps to balance the SPL attenuation with distance that occurs in the direct field. At closer listening positions, the off-axis attenuation at higher frequencies provides a similar tonal balance and the overall SPL attenuation with distance is reduced.

Although XT enclosures have controlled directivity attenuation properties it is important not to have the first members of the audience too close to the system (i.e., in order not to produce excessive sound pressure levels down front). Ideally, the ratio between the shortest and the furthest distance covered should not exceed 1:4 and in order to achieve this it is often desirable to fly the system. However, when XT enclosures are flown and the audience seating area begins very close to the stage, it is often necessary to use distributed front-fill speakers (for example, L-ACOUSTICS MTD108a) or a ground stacked left/right XT stereo infill system in order to improve coverage and image localization for the first few rows of the audience.

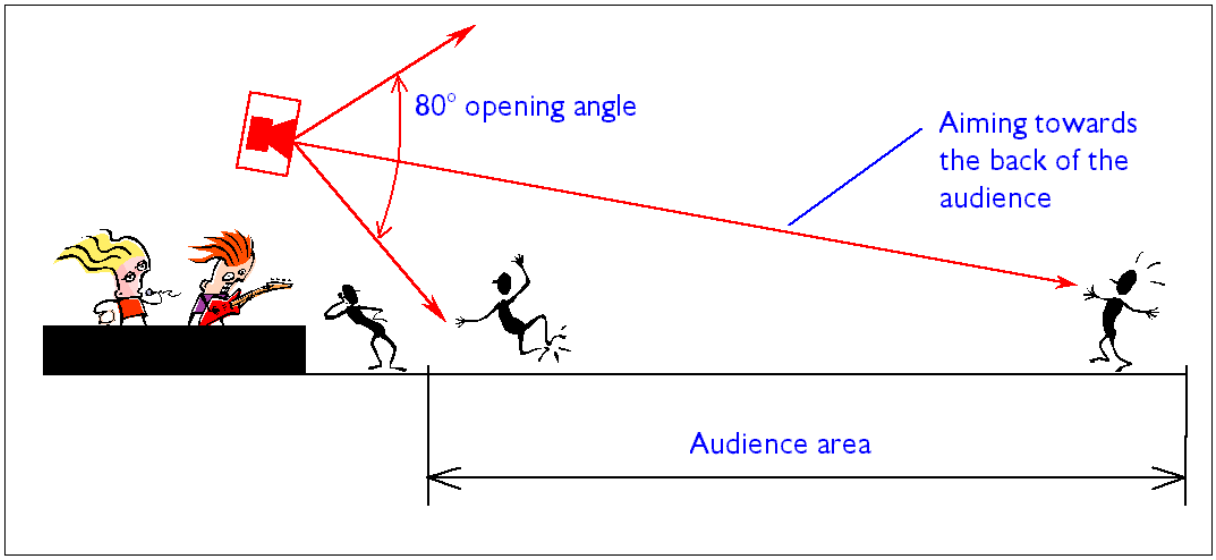

Figure 18: General guidelines for aiming XT enclosures

4.3 DISTRIBUTED SOUND REINFORCEMENT

Distributed sound reinforcement using XT enclosures can provide even SPL coverage and frequency response by reducing the effects of audible interference. For distributed installation, the optimum spacing between enclosures will depend on the coverage angle of the individual enclosure (90 degrees for 112XT, 80 degrees for 115XT, 50 degrees for 115XT HiQ) and the throw distance to the audience listening plane.

In general, the goal is to separate XT enclosures so that the -6 dB coverage angle of one enclosure is aligned with the main 0 degree axis of the other enclosure (and vice versa) at the listening plane of the audience. This is termed centre-to-centre alignment and is illustrated in Figure 19.

Alternatively, the separation between XT enclosures can be selected so that the -3 dB coverage angles are aligned – this is termed edge-to-edge alignment and is the technique used when modeling XT coverage with L-ACOUSTICS SOUNDVISION software (see Section 4.5).

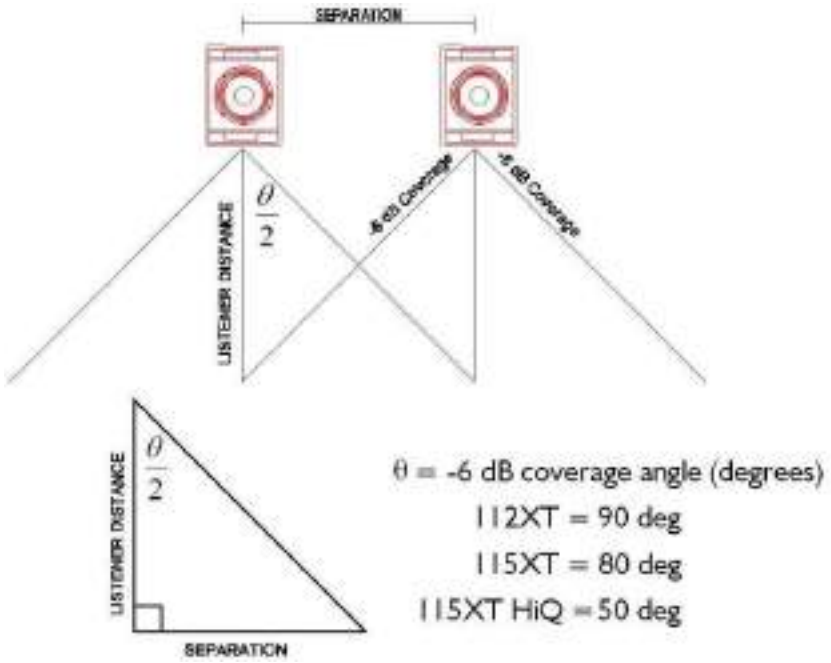

Figure 19: General guidelines for XT enclosure spacing for distributed sound reinforcement

ARRAY2004 software provides a convenient excel spreadsheet tool for determining XT spacing. Simply enter the throw distance for your application and the optimum spacing is automatically calculated according to the geometry illustrated in Figure 19.

ENTER THROW DISTANCE	6.0 m

	112XT	115XT	115XT HiQ
-6 dB coverage angle	90 deg	80 deg	50 deg
SEPARATION	6.0 m	5.0 m	2.8 m
HORIZ COVERAGE (2 speakers)	12.0 m	10.1 m	5.6 m
HORIZ COVERAGE (3 speakers)	18.0 m	15.1 m	8.4 m

Figure 20: ARRAY 2004 XT enclosure spacing calculation utility

4.4 PREDICTING XT COVERAGE

Polar data files are available for modeling 112XT, 115XT and 115XT HiQ coverage using industry-standard EASE or CATT-Acoustic room acoustics modeling software packages.

For more information on these modeling programs, please consult:

www.ada-acousticdesign.com for EASE information

www.catt.se for CATT.

112XT, 115XT and 115XT HiQ polar data (EASE or CATT format) is available for download from:

www.l-acoustics.com.

4.5 XT COVERAGE MODELING USING SOUNDVISION

As an alternative to CATT or EASE, L-ACOUSTICS SOUNDVISION is a 3D software program dedicated to the modeling of L-ACOUSTICS products including the XT line. Designed with a convenient, intuitive graphical user interface, SOUNDVISION allows for the calculation of sound pressure level (SPL) and coverage mapping for complex sound system or venue configurations.

Room geometry and loudspeaker locations are defined in 3D and simplified operating modes allow the user to work in 2D to rapidly enter data. According to user preference, either horizontal (plan) or vertical (cut) views can be selected to enter room coordinates or to define loudspeaker placement/aiming. SPL plus coverage mapping are then based on direct sound calculations over the defined audience geometry.

SOUNDVISION features a user-friendly interface with multiple toolboxes that allow for convenient entry of room and loudspeaker data while at the same time displaying coverage or mapping results along with 2D Cutview, Target and Source Cutview information. All toolboxes can be displayed simultaneously, providing the user with a complete control interface that allows for rapid system optimization.

Using sophisticated modeling algorithms, SOUNDVISION offers several levels of support for users of L-ACOUSTICS products. Due to its speed and ease-of-use, "Impact" mode is well-suited to the needs of touring sound engineers and touring sound companies. More detailed information is available in "SPL Mapping" mode, providing an invaluable tool for the audio consultant or sound designer. For the installer, the physical properties provided in "Mechanical Data" mode provide useful practical information for fixed installation applications.

Impact mode coverage is based on the -6 dB directivity over a 1-10 kHz operating bandwidth (at 5 degree angular resolution) and allows for immediate visualization of system coverage and SPL distribution. Optimum SPL contours are highlighted within the displayed -6 dB coverage pattern (filled circles corresponding to the -3 dB coverage pattern) in order to facilitate the implementation of multiple source installations. For distributed sound reinforcement design using coaxial loudspeakers, the goal is to align the filled circles in order to have even coverage (see Section 4.3).

Mapping mode provides a color-coded representation of the SPL distribution over the defined room geometry and allows for visualization of the coverage of individual loudspeakers as well as the interference between multiple loudspeakers. In mapping mode, the user can select individual one third octave bandwidths (as shown in Fig 21), unweighted or A-weighted SPL or any frequency range between 100 – 10k Hz (as shown in Fig 22). Typically a 1-10 kHz bandwidth SPL mapping is considered to provide a good representation of system performance since this frequency bandwidth is primarily responsible for the perceived system intelligibility and clarity.

Note: For color versions of Figures 21-26 please see the XT manual PDF file that is available for download from www.l-acoustics.com

Figure 21 shows SPL mappings generated using SOUNDVISION at octave band frequencies for a single 112XT enclosure, demonstrating the evenness of coverage and single point source behavior that is obtained using coaxial technology.

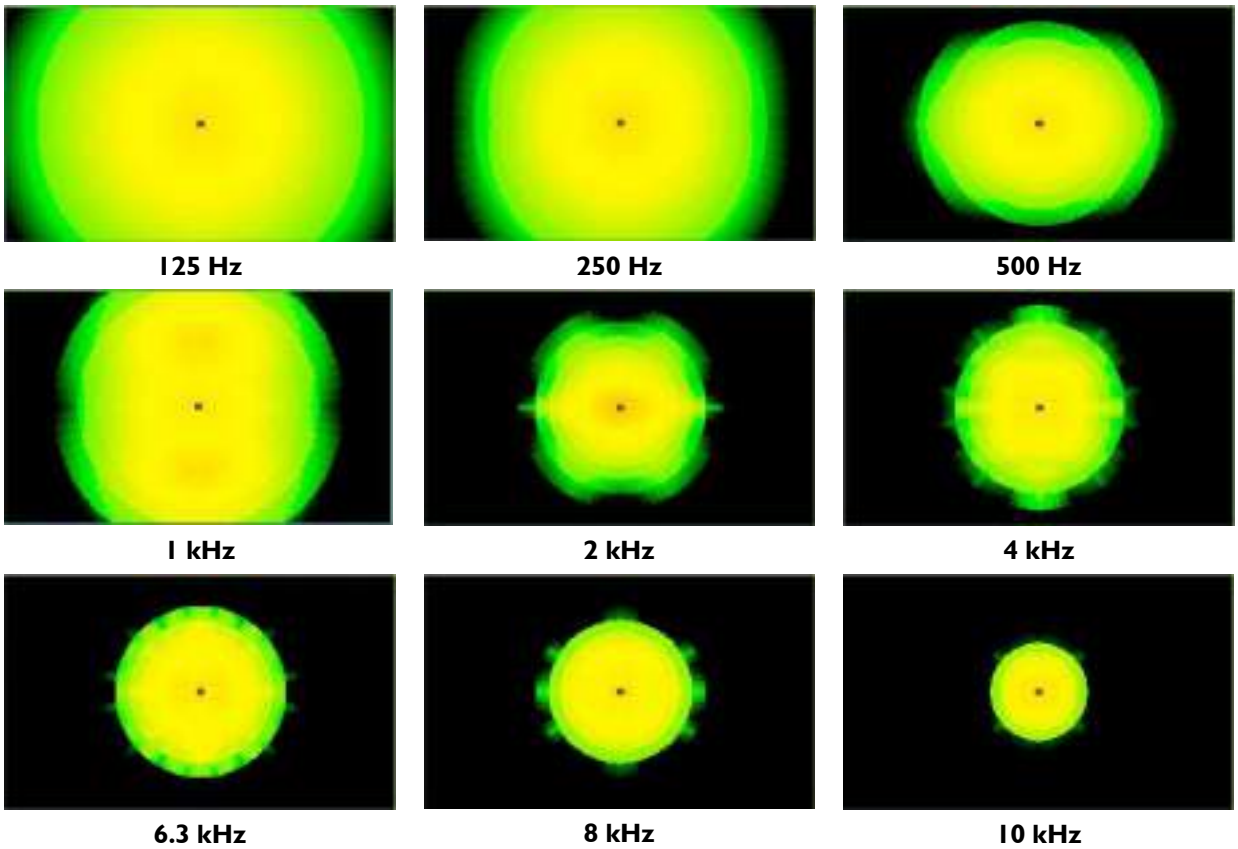

Figure 21: SPL mappings at octave band frequencies for a single 112XT enclosure (6 metre throw distance)

Figure 22 shows impact mode coverage and band-averaged SPL mappings for the single 112XT enclosure of Figure 21.

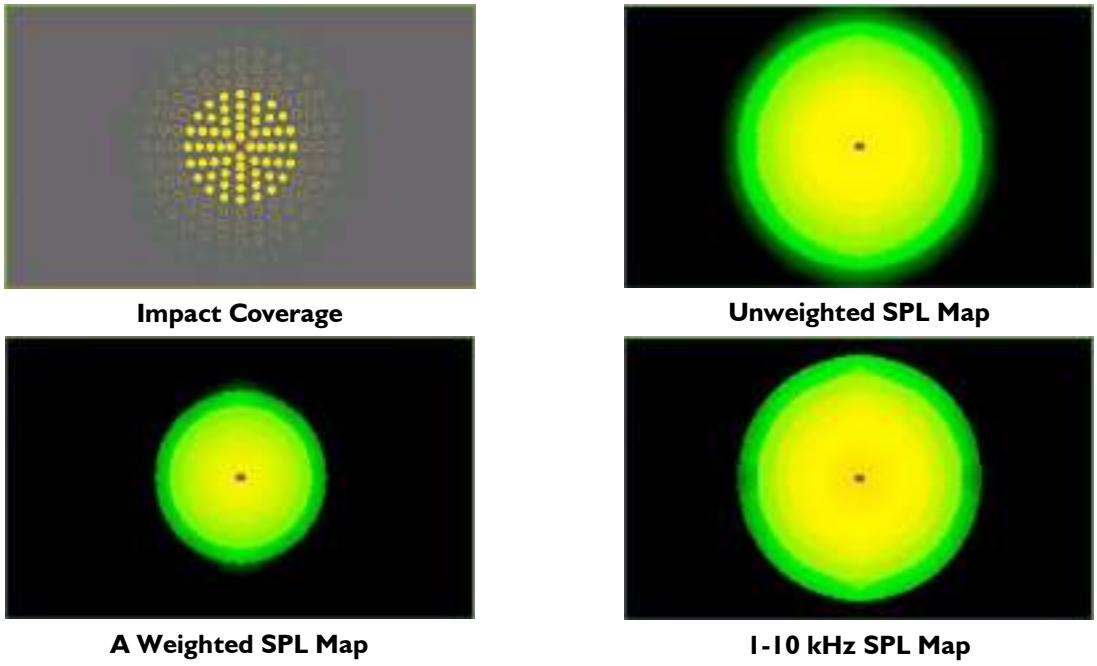

Figure 22: Impact coverage and SPL mappings (unweighted, A-weighted, 1-10 kHz bandwidth) for a single 112XT enclosure (6 metre throw distance)

Figures 23 and 24 show SPL mappings and impact coverage for a distributed system of two XT enclosures with optimum spacing (6 meter separation for a 6 meter throw distance - see Section 4.3 and Figure 20). Interference effects occur at lower frequencies and will tend to be masked by room reverberation. At higher frequencies, more tightly-spaced comb filtering effects cannot be resolved by the ear. Essentially, the key to successful distributed system design is avoiding significant interaction throughout the critical mid band frequency range in order to reduce audible interference effects.

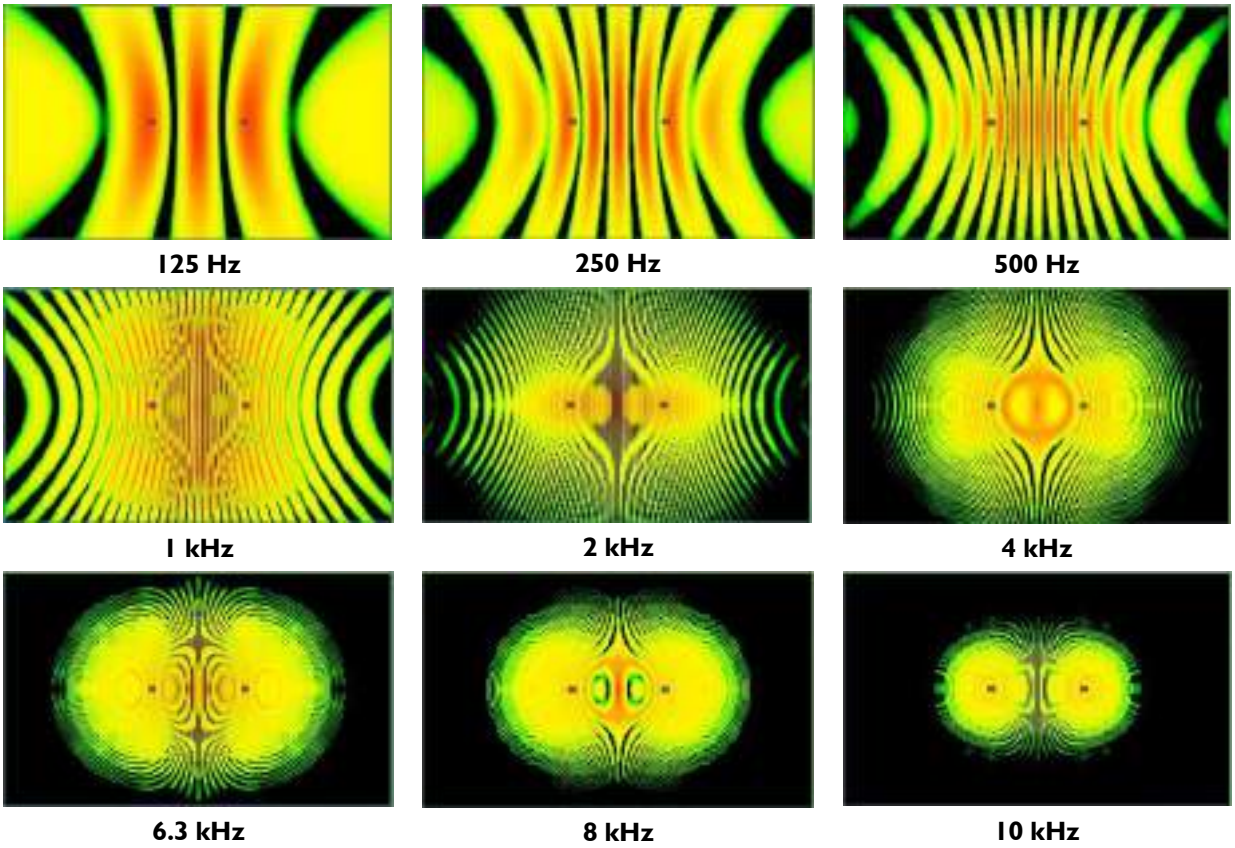

Figure 23: SPL mappings at octave band frequencies for two 112XT enclosures with optimum 6 metre spacing (6 metre throw distance)

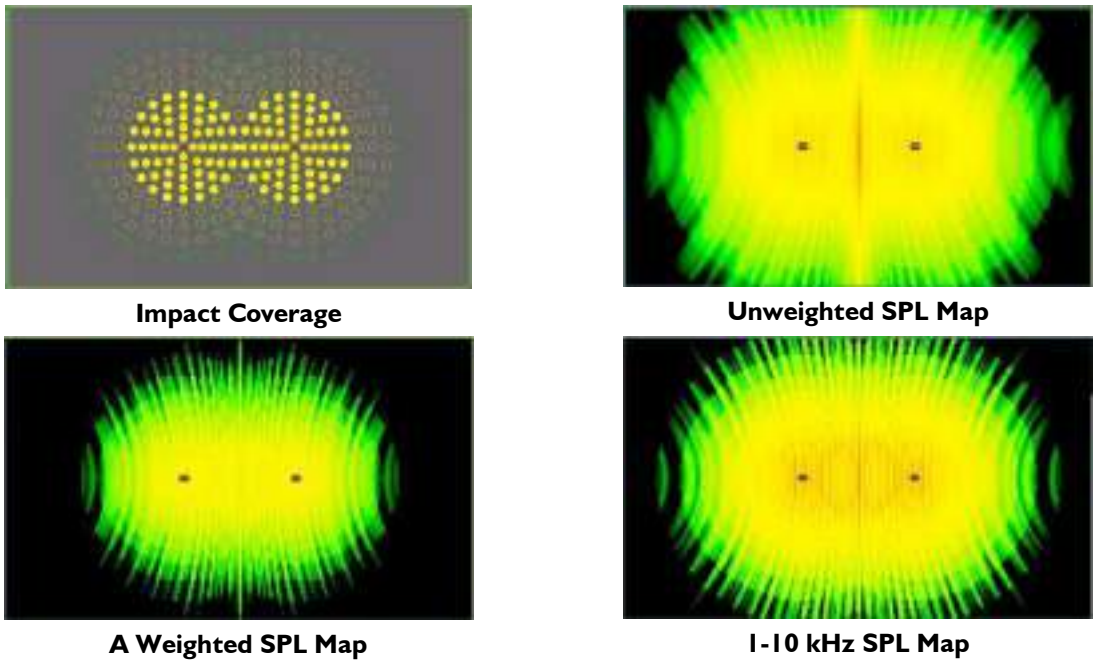

Figure 24: Impact coverage and SPL mappings (unweighted, A-weighted, 1-10 kHz bandwidth) for two 112XT enclosures with optimum 6 metre spacing (6 metre throw distance)

Figures 25 and 26 show SPL mappings and impact coverage for two 112XT enclosures with non-optimum spacing of 0.5 meters. Uneven coverage above 500 Hz demonstrates the comb filtering interference effects that arise due to path length differences as a function of listener position. Since the enclosures are physically too close together, these interference effects will be highly audible as a function of listener position in the critical mid band frequency range (500 – 2 kHz).

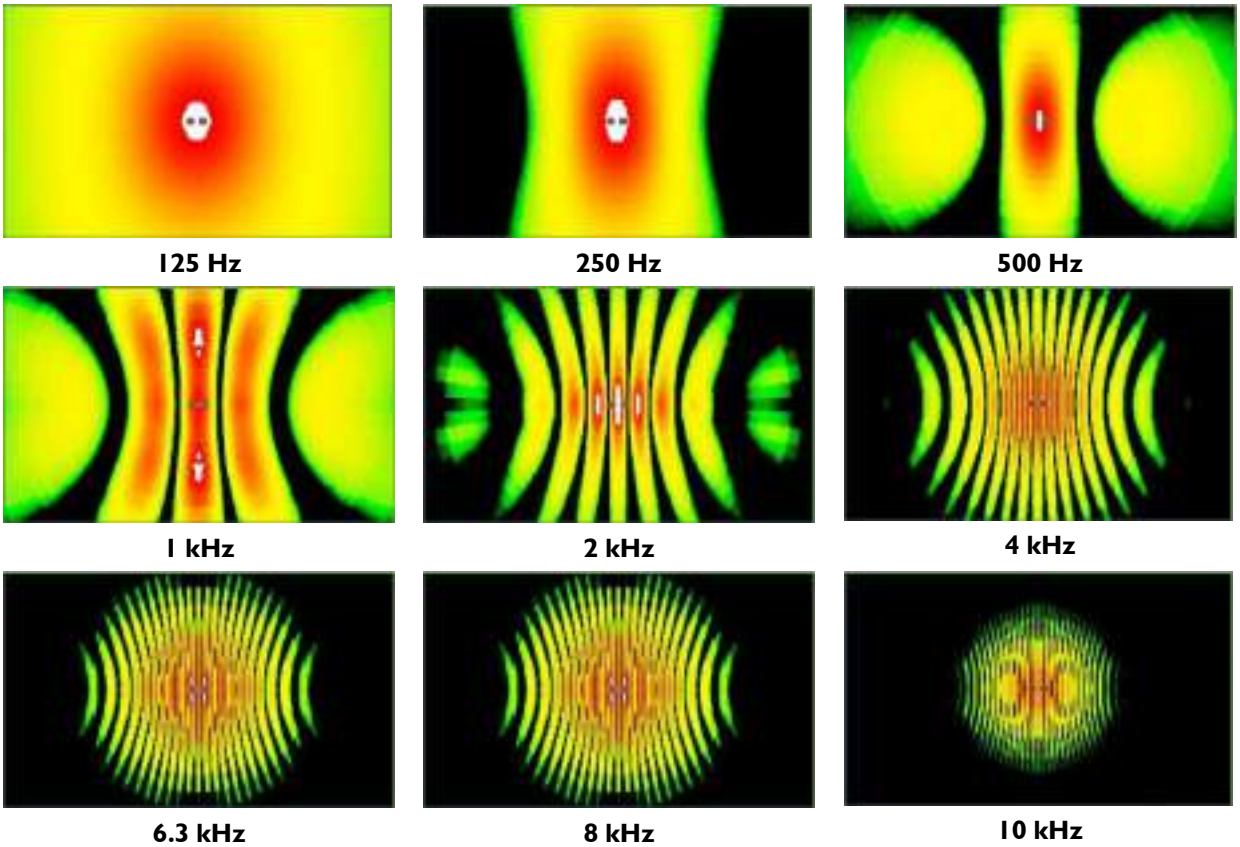

Figure 25: SPL mappings at octave band frequencies for two 112XT enclosures with non-optimum 0.5 metre spacing (6 metre throw distance)

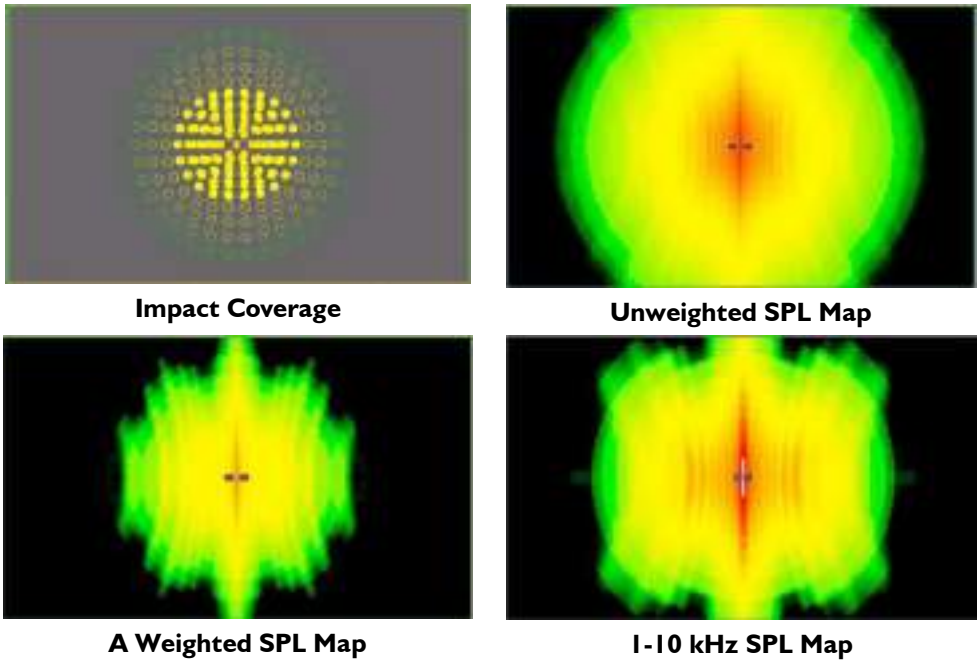

Figure 26: Impact coverage and SPL mappings (unweighted, A-weighted, 1-10 kHz bandwidth) for two 112XT enclosures with non-optimum 0.5 metre spacing (6 metre throw distance)

4.6 DISTRIBUTED SOUND REINFORCEMENT

Figure 27: Distributed 112XT installation (Puy du Fou, France)

4.6.1 OVERHEAD DISTRIBUTED SYSTEMS

Overhead distributed system design using coaxial loudspeakers is described in Davis and Davis, Sound System Engineering, 2nd Edition, Focal Press, 1997. In this reference it is shown that an overhead crisscross pattern distribution density with center-to-center overlap provides the most uniform coverage (+/- 2 dB variation in SPL from between 250 – 5k Hz is possible). Formulae are provided for various cases: center-to-center overlap, minimum overlap or no overlap in order to determine physical layout parameters for the distributed loudspeaker grid. Interested readers are referred to Chapter 13, "Distributed Sound Systems" in Sound System Engineering for complete details.

4.6.2 DELAY SYSTEMS

XT enclosures are highly suited for distributed delay system installation in order to cover large audience areas. When installing delay systems, there are a few principles that should be followed:

1) Over-delaying up to 15 ms is acceptable due to the Haas effect. Greater than 15 ms is not acceptable since the delayed sound will be perceived as an echo arriving after the main signal. Time alignment of delays should be made using a measurement point on the axis of the reference source and the delayed source. If the delay time setting is such that the two sources arrive at the same time on-axis, the reference source will be slightly ahead of the delay source at any other location off-axis and the Haas effect will allow for correct localization. For some applications (speech), it is advised to under-delay in order to optimize off-axis intelligibility and clarity behind the delayed system (i.e., closer to the stage).

2) Spread different sources, with different delayed signals, instead of grouping them in a single location. This allows for broader coverage by the delayed sources and produces more homogeneous SPL over the delay-covered area.

3) Distributed delay positions should be along a circular arc of constant radius, centered at the stage.

4) The optimum spacing between delay loudspeakers will depend on the coverage angle of the enclosure (90 degrees for 112XT, 80 degrees for 115XT, 50 degrees for 115XT HiQ) as well as the distance to first members of the audience. Center-to-center overlap will provide the most uniform coverage (see Sections 4.3 and 4.5).

Time domain-based measurement equipment is essential for setting delay times (for example, MLSSA, WINMLS, TEF, SMAART or SPECTRAFOO). Alternatively, Bushnell Yardage Pro rangefinder binoculars or the Leica Disto Classic laser distance meter can provide a good starting point by simply measuring the distance from the delay location to the main system, i.e., the geometric path difference.

Figure 28: Underbalcony delay system (Saejong Cultural Centre, Korea)

4.6.3 COMPLEMENTARY FILL

For large-scale sound reinforcement (typically when V-DOSC, dV-DOSC or ARCS are used as the main FOH system), XT enclosures can be used for distributed front fill (ground stacked), flown center cluster downfill, stereo in-fill, offstage fill or as distributed delays. The number of potential uses for XT enclosures for fill applications is only limited by your imagination.

In all cases, proper time alignment of fill systems with respect to the main FOH system is essential for obtaining optimum results. Similarly, pre-delay to time align the overall sound reinforcement system (main FOH plus fill systems) with the energy generated on stage is also an important consideration for the first 10 rows of the audience. WINMLS, SMAART or SPECTRAFOO are cost-effective measurement tools for performing time alignment that are recommended.

FLOWN CENTER CLUSTER

Due to their compact size, point source behavior and generous coverage, XT enclosures are highly suitable for center cluster applications. Typically this will be necessary when the stage opening is wide and main L/R FOH system separation is more than 20 meters. Apart from coverage issues, image localization is an important consideration (particularly for theatrical installations) and careful time alignment plus attenuation can significantly improve subjective localization for the audience to the onstage performers. In some cases, two XT enclosures can be arrayed vertically as a center cluster and considered as separate floor and balcony systems with different signal processing (time delay, level, equalization) applied to the individual XT enclosures in order to optimize image localization for the two separate audience areas. Trim height and tilt of the XT center cluster fill system will depend on the distance to the first rows of the audience and on the height of the proscenium opening.

DISTRIBUTED FRONT FILL

As an alternative (or complement) to a flown center cluster, XT enclosures can be stacked on top of a central line array of subwoofers (or any other object of suitable height) provided that the height of the HF section is appropriate for audience coverage. Typically, a stacked height of at least 1-2 meters is recommended in order to reduce audience shadowing effects and whether the audience is seated or standing should also be considered. In addition to these issues, sightlines and clearance under the stage lip are also important considerations for a distributed front fill system and when space is at a premium, the MTD108a (or dV-DOSC) can be considered as alternatives.

As for overhead distributed or delay systems, the optimum spacing between XT enclosures will depend on the coverage angle of the enclosure and the distance to the first members of the audience (see Sections 4.3 and 4.5). Center-to-center overlap will provide the most uniform coverage and separate time alignment delay taps for front fill enclosures can further assist in improving image localization.

Figure 29: Distributed 112XT front fill system

OFFSTAGE FILL

When the horizontal coverage of the main FOH arrays is not sufficient to cover the entire audience area, XT enclosures can also be used for offstage fill. Typically, throw distance requirements are shorter and vertical coverage angles are greater, making XT a possible solution for this application.

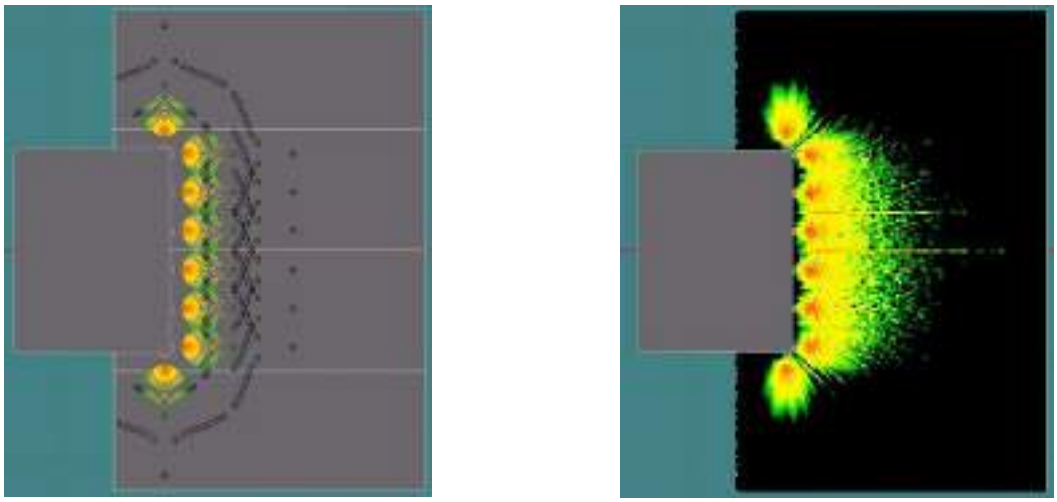

Impact Coverage **1-10 kHz SPL Map**

Figure 30: Distributed 112XT front fill and offstage fill system

STEREO INFILL

Stacked stereo infill systems using XT enclosures either located onstage or stacked on top of L/R ground stacked subwoofer arrays can also be effective for front fill purposes. It is always a good idea to keep XT enclosures physically as close as possible to the subwoofers in order to improve sonic integration between the fill system and the subwoofers plus to reduce low frequency proximity effects for the audience located close to the subwoofers (i.e., it's good to give the audience some high end to help offset all that sub energy!). For smaller set designs, it can also be an option to place stereo front-fill XT enclosures close to the onstage side-fill monitoring system.

As for distributed front fill applications, the height of the HF section should be optimized to suit the audience seating area in order to reduce shadowing effects. Special attention should be paid to the first few rows and a stacked height of at least 1-2 meters is recommended. If possible, use distance-attenuation loss to your advantage and move XT enclosures as far upstage as possible in order to reduce the increase in SPL over the first few rows relative to the audience further back in the coverage region.

Some Final Notes Concerning Fill Applications

Digital processor presets for 112XT, 115XT and 115XT HiQ loudspeaker enclosures have been specifically engineered to be sonically compatible with all other L-ACOUSTICS models.

FILL presets (nominally flat) are recommended for all proximity fill applications where the audience is located close to fill loudspeakers – for example, front fill or stereo infill configurations.

Time alignment of complementary fill systems with the main left/right FOH arrays is necessary in order to achieve optimum results. Placing your measurement microphone in a representative location where the fill and main system coverage overlaps generally provides a good reference point for time alignment. WINMLS, SMAART or SPECTRAFOO are cost-effective measurement tools that are recommended for this purpose.

4.7 FRONT-OF-HOUSE (FOH) APPLICATIONS

When 112XT, 115XT or 115XT HiQ enclosures are used standalone (without subwoofers) for FOH applications, there are two different types of 2-way preset available: 1) FRONT presets have 3 dB of low and high frequency shelving equalization in order to provide a frequency response contour that is suitable for music applications; 2) FILL presets have nominally flat response for use in speech reinforcement and classical music applications or for when XT enclosures are used as a close proximity fill enclosure.

For 3-way operation of 112XT or 115XT loudspeaker enclosures with SB115, SB118, SB218 or dV-SUB subwoofers there are two different types of preset available: 1) 3W presets optimize the power bandwidth for the XT and its companion subwoofer due to the use of complimentary 100 Hz crossover filtering and are recommended for all closely-coupled applications (for example, stacked configurations); 2) 3WX presets can be employed when XT enclosures and subwoofers are physically separated (for example, flown XT enclosures and ground stacked subwoofers).

For all FOH applications, please refer to Sections 4.2-4.5 concerning XT aiming, arraying and coverage prediction. For additional information on using XT enclosures with subwoofers, please refer to Section 4.8.

4.8 STAGE MONITORING

Given the power of digital signal processing and due to their compact, wedge-shaped format and axi-symmetrical directivity, XT enclosures provide an extremely high performance, "plug and play" stage monitoring solution.

FLOOR MONITORING

For floor monitoring applications, the coaxial component configuration employed in the 112XT, 115XT and 115XT HiQ provides a high degree of image and coverage stability. The benefits of axi-symmetric directivity are even more apparent since the performer is in close physical proximity to enclosure and experiences a generous, homogeneous coverage pattern without the subjective impression (and potential feedback problems) of listening to a separate horn / woofer combination.

MONITOR presets include additional low frequency equalization to account for half-space loading conditions and are intended for either floor monitoring applications or fixed installations where the XT is wall- or ceiling-mounted. In general, under half-space loading conditions, there is a 6 dB increase around 100 Hz (due to floor coupling), followed by a broad cancellation that occurs between 200 – 600 Hz (due to floor reflections). MONITOR presets compensate for these two half-space loading effects and provide a frequency response curve that is nominally flat.

Subjectively, low frequency half-space loading compensation provides a high degree of "warmth and body" to vocals, while the flat high frequency response that has been engineered for the MONITOR preset provides excellent fidelity and feedback resistance. Since the overall MONITOR response curve is nominally flat, simple adjustments to the relative output gains between high and low channels allow the monitor engineer to quickly adjust the overall response contour to obtain more vocal presence (as desired). Power response is very even and stable due to the axi-symmetric directivity of the coaxial component configuration and this results in improved coverage and feedback resistance.

When using XT enclosures in pairs for floor monitoring, the same principles apply as for overhead or distributed front fill systems, i.e., the optimum spacing between floor monitors will depend on the coverage angle of the enclosure (90 degrees for 112XT, 80 degrees for 115XT, 50 degrees for 115XT HiQ) and the throw distance to the performing artist (which is determined by the floor monitor angle with respect to vertical and the artist's height). Center-to-center overlap will provide the most uniform coverage (see Section 4.3) and as a guideline, nominal floor monitor distance plus separation is tabulated below in Table 15.

Apart from separation and distance to the performer, the last issue to consider when using XT enclosures as floor monitors in paired configurations is whether to angle them in towards the performer. Although it looks more "rock and roll" and gives the performer the impression of having more SPL, it is generally not advised to angle wedges in but to use them with the front faces parallel to each other. Essentially, angling in wedges no longer provides optimum center-to-center overlap and results in too much overlap. Due to this excessive overlap, there will be a cancellation loss of up to 8 dB in the high end (above 6 kHz, approximately) that will need to be compensated for via output gain adjustment and/or equalization. Ultimately, it all comes down to artist preference, what you're shooting for in a monitor mix, the rear rejection of the particular microphone you're using, whether the artist is also wearing in-ear monitors (and many other variables …) but if you want optimum coverage and nominally flat, follow the spacing/distance recommendations in Table 15 and don't angle the wedges in.

Table 15: Nominal floor monitor distance (to performer) and monitor separation versus performer height

112XT (45 deg angle wrt vertical, 90 deg coverage)

PERFORMER HEIGHT		Performer <-> Monitor		Monitor <-> Monitor	
(cm)	(ft / in)	(cm)	(ft / in)	(cm)	(ft / in)
160	5 ft 3 in	160	5 ft 3 in	160	5 ft 3 in
165	5 ft 5 in	165	5 ft 5 in	165	5 ft 5 in
170	5 ft 7 in	170	5 ft 7 in	170	5 ft 7 in
175	5 ft 9 in	175	5 ft 9 in	175	5 ft 9 in
180	5 ft 11 in	180	5 ft 11 in	180	5 ft 11 in
185	6 ft 1 in	185	6 ft 1 in	185	6 ft 1 in
190	6 ft 3 in	190	6 ft 3 in	190	6 ft 3 in

115XT (41 deg angle wrt vertical, 80 deg coverage)

PERFORMER HEIGHT		Performer <-> Monitor		Monitor <-> Monitor	
(cm)	(ft / in)	(cm)	(ft / in)	(cm)	(ft / in)
160	5 ft 3 in	139	4 ft 7 in	117	3 ft 10 in
165	5 ft 5 in	143	4 ft 8 in	120	3 ft 11 in
170	5 ft 7 in	148	4 ft 10 in	124	4 ft 1 in
175	5 ft 9 in	152	4 ft 12 in	128	4 ft 2 in
180	5 ft 11 in	156	5 ft 2 in	131	4 ft 4 in
185	6 ft 1 in	161	5 ft 3 in	135	4 ft 5 in
190	6 ft 3 in	165	5 ft 5 in	139	4 ft 7 in

115XT HiQ (short throw: 30 angle wrt vertical, 50 deg coverage)

PERFORMER HEIGHT		Performer <-> Monitor		Monitor <-> Monitor	
(cm)	(ft / in)	(cm)	(ft / in)	(cm)	(ft / in)
160	5 ft 3 in	92	3 ft 0 in	43	1 ft 5 in
165	5 ft 5 in	95	3 ft 2 in	44	1 ft 5 in
170	5 ft 7 in	98	3 ft 3 in	46	1 ft 6 in
175	5 ft 9 in	101	3 ft 4 in	47	1 ft 7 in
180	5 ft 11 in	104	3 ft 5 in	48	1 ft 7 in
185	6 ft 1 in	107	3 ft 6 in	50	1 ft 8 in
190	6 ft 3 in	110	3 ft 7 in	51	1 ft 8 in

115XT HiQ (long throw: 60 angle wrt vertical, 50 deg coverage)

PERFORMER HEIGHT		Performer <-> Monitor		Monitor <-> Monitor	
(cm)	(ft / in)	(cm)	(ft / in)	(cm)	(ft / in)
160	5 ft 3 in	277	9 ft 1 in	129	4 ft 3 in
165	5 ft 5 in	286	9 ft 5 in	133	4 ft 4 in
170	5 ft 7 in	294	9 ft 8 in	137	4 ft 6 in
175	5 ft 9 in	303	9 ft 11 in	141	4 ft 8 in
180	5 ft 11 in	312	10 ft 3 in	145	4 ft 9 in
185	6 ft 1 in	320	10 ft 6 in	149	4 ft 11 in
190	6 ft 3 in	329	10 ft 10 in	153	5 ft 0 in

SIDE FILL OR DRUM FILL MONITORING

When used in conjunction with SB115, SB118, SB218 or dV-SUB subwoofers, 112XT or 115XT enclosures provide an excellent solution for side fill or drum fill monitoring. Single or two enclosure stacked configurations are the most common set-up for these applications and the XT can also be used without subwoofers depending on the amount of LF extension expected by the monitor engineer or performing artist.

When stacked on top of vertically-oriented SB118 or SB218 subwoofers for side fill applications, XT enclosures will physically be at a convenient height that is close to the performer's ear level. Normally for drum fill, subwoofers will be oriented horizontally in order to maintain a low profile.

Since the XT and its companion subwoofer are physically coupled for side fill or drum monitoring applications, 3W presets are recommended since complimentary 100 Hz crossover filtering optimizes the power bandwidth for the subwoofer and the 112XT or 115XT low section (please see Section 4.8 for further details).

4.9 USING XT WITH SUBWOOFERS

For most music applications, 112XT or 115XT enclosures should be used with SB115, SB118, SB218 or dV-SUB subwoofers. Issues involved in effectively using XT with subwoofers are discussed below and as a reference, L-ACOUSTICS subwoofer specifications are summarized in Table 16 and Fig 14.

Table 16: L-ACOUSTICS Subwoofer Specification Summary

L-ACOUSTICS SUB MODEL	Freq Resp (+/- 3 dB)	Usable LF (-10 dB)	Sensitivity (1W / 1m)	RMS Voltage	POWER (cont)	POWER (peak)	MAX SPL (cont)	MAX SPL (peak)	REC'D AMP	LOAD (ohms)
SB115	45 - 100 Hz	40 Hz	94	45	250 W	1000 W	120 dB	126 dB	500 W	8
SB118	35 - 100 Hz	32 Hz	97	70	600 W	2400 W	125 dB	131 dB	1200 W	8
SB218	28 - 140 Hz	25 Hz	100.5	68	1100 W	4400 W	130 dB	136 dB	2200 W	4
dV-SUB	40 - 200 Hz	35 Hz	104.5	57	1200 W	4800 W	133 dB	139 dB	2400 W	2.7

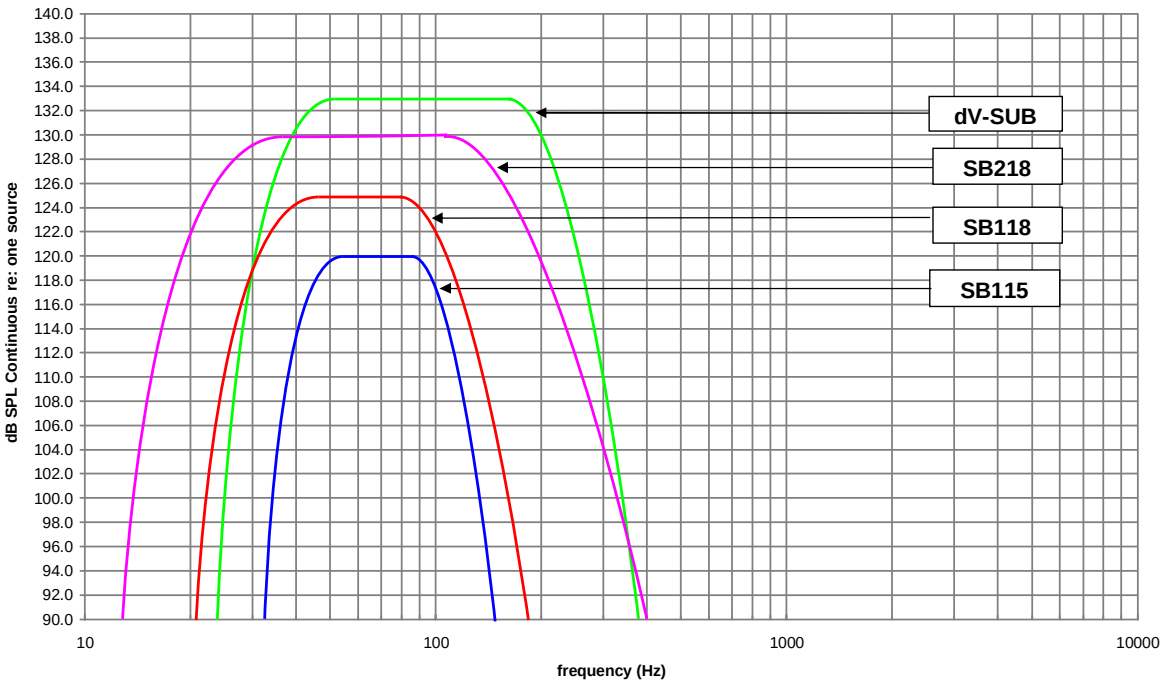

Figure 31: L-ACOUSTICS Subwoofer Continuous Unweighted SPL Comparison

All 3-way XT presets have been optimized to provide a 6 dB low frequency contour when subwoofers are used with 112XT or 115XT enclosures in a 1:1 XT:subwoofer ratio. In order to compensate for sensitivity differences between subwoofer models, relative sub, low and high output channel gains have been adjusted for individual presets so that the same 6 dB low frequency contour is obtained, regardless of the subwoofer model in use.

4.9.1 Combining XT With Subwoofers

Two cases can be considered: ground stacked systems where XT and subwoofer enclosures are closely coupled physically or separate flown XT loudspeakers with ground stacked subwoofers. For both cases, processing will depend on the intended purpose of the subwoofers, i.e., in some applications, subwoofers are used as an effect and are not driven with the same signal as the main XT system (separate auxiliary send from the console) while in other cases, the subwoofers are used as a low frequency extension of the array and are driven with the same signal in 3-way mode.

In general:

3W Presets have a 100 Hz 24 dB/octave Linkwitz-Riley (LR24) low pass filter for the subwoofers with a complimentary 100 Hz LR24 high pass filter for the 112XT or 115XT low section. Complimentary 100 Hz crossover filtering optimizes the power bandwidth for the subwoofer and the 112XT or 115XT low section. 3W presets are recommended for all stacked XT/subwoofer applications where the enclosures are closely coupled physically.

3WX presets have an 80 Hz LR24 low pass filter for the subwoofers and an overlapping LR24 high pass filter for the XT low section (45 Hz HPF for 112XT, 40 Hz HPF for 115XT). Due to the overlap in the operating bandwidths of the sub and low sections, subwoofer polarity may have to be inverted due to the phase shift of overlapping crossover filters (depending on the selected preset and how the subwoofers are driven, i.e., via AUX send or with the same signal as sent to the XT system).

4.9.2 Ground Stacked Systems

For ground stacked systems, XT and subwoofer enclosures are physically close to each other and time alignment is simplified throughout the audience area since there are no arrival time (path length) differences between the flown XT system versus ground stacked subwoofers. Typically, 3W presets are used for ground stacked configurations in order to optimize power bandwidth for the subwoofer and XT low section and the overall system is driven in either 3-way mode or with separate AUX drive (although 3WX presets can also be used).

4.9.3 Separate Flown XT Array with Ground Stacked Subwoofers

For a separate flown XT array with ground stacked subwoofers, time alignment of subwoofers is required due to the geometric path difference between the two systems. This is illustrated in Figure 32, where the distance from the measurement microphone position to the subwoofers is d_{SUB} while the distance to the flown XT system: $d_{FLOWN} = d_{SUB}$ + PATH DIFFERENCE. Delaying the subwoofers by the geometric path difference will time align the subwoofers at the reference position.

Note: Selection of the reference position for time alignment is always a compromise since the geometric path difference will vary with position.

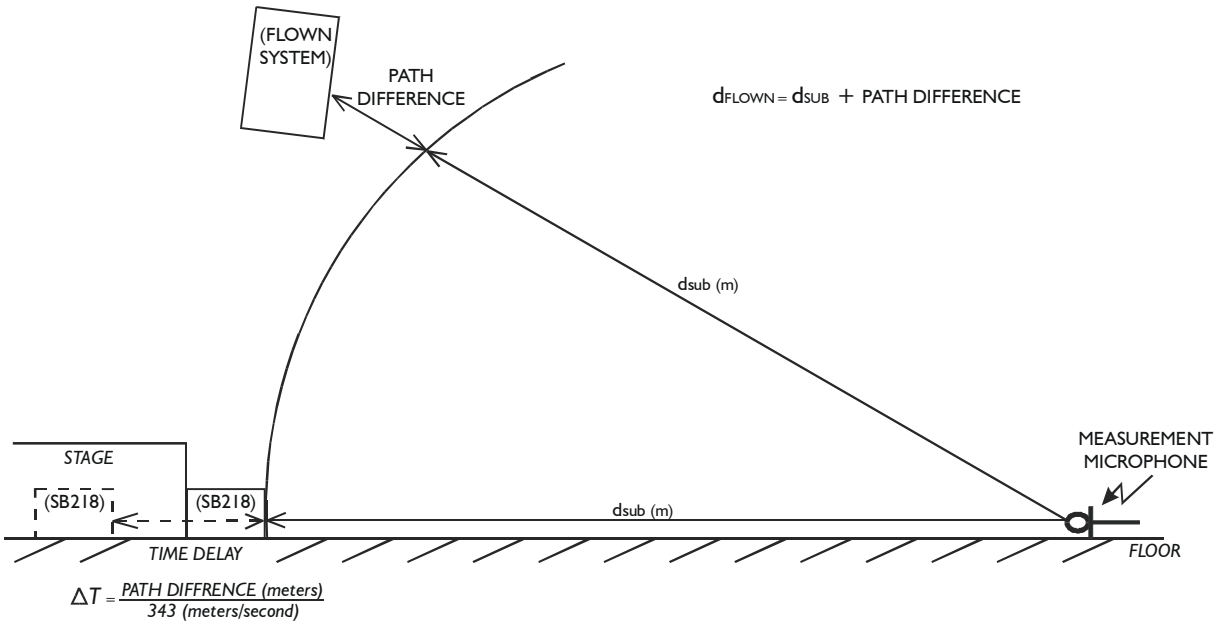

Figure 32: Illustration of subwoofer time alignment

In most cases, 3W presets are used for flown XT and ground stacked subwoofer configurations in (3-way mode or with separate AUX drive for the subwoofers) since the subwoofers can be used with positive polarity and this helps to simplify installation and system tuning.

If more low frequency energy is desired from the flown XT system, 3WX presets can be used and subwoofer polarity will depend on how subwoofers are processed, i.e., whether they are driven with the same signal as the XT enclosure or driven via discrete AUX send. Following time alignment, subwoofer polarity is a parameter to experiment with in order to obtain the best results.

5. INSTALLATION PROCEDURES

5.1 ETR112XT, ETR115XT U-BRACKET ATTACHMENT

ETR112XT and ETR115XT are optional accessory U-Brackets for ceiling, wall or scaffold mounting of the 112XT and 115XT or 115XT HiQ, respectively, in either horizontal or vertical orientations. Three mount holes are available on the center section of the ETR112XT and ETR115XT for bracket mounting. Pole mount adapter plates on 112XT,115XT and 115XT HiQ enclosures allow for 10 degree angular resolution.

Note: When using ETR112XT or ETR115XT in the vertical orientation, always install with the fixed arm on the bottom and the pivoting arm on top.

(1) ETR112XT U-bracket

(2) Scaffold clamp (not supplied)

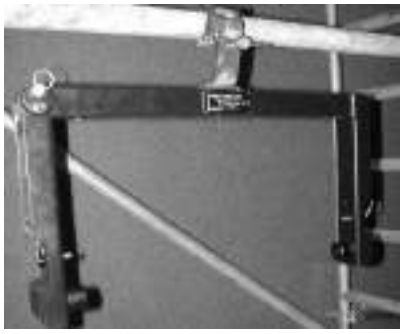

(3) Premounted ETR112XT

(4) Remove locking pins on both U-bracket arms

(5) Remove locking pin for pivoting arm

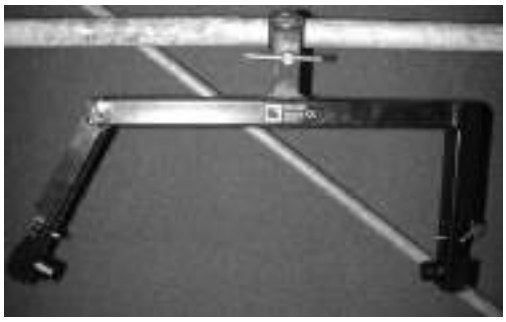

(6) ETR112XT - ready to mount the 112XT

(7) 112XT pole mount sockets mate with U-bracket studs

(8) Mount the 112XT in the fixed arm side first

(9) Rotate the pivoting arm into position – the locking pin automatically secures the U-bracket

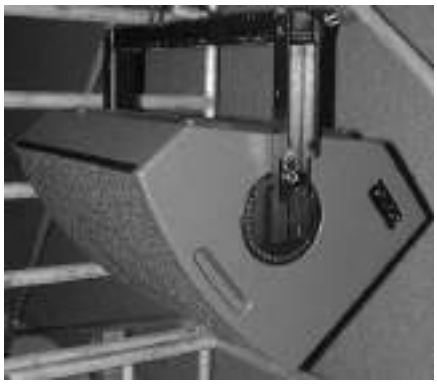

(10) Rotate the loudspeaker into position to select the desired angle. Secure using the locking pins on both fixed and pivoting arms

Figure 33: ETR112XT, ETR115XT U-bracket installation procedure

5.2 CPL112XT, CPL115XT COUPLING ADAPTER BAR ATTACHMENT

The CPL112XT or CPL115XT coupling adapter bars are optional accessories that can be used in conjunction with ETR112XT or ETR115XT U-brackets to array two 112XT or 115XT (115XT HiQ) enclosures vertically (with independent tilt adjustment for both enclosures).

(1) CPL112XT coupling adapter bar kit

(2) CPL112XT pre-installed with ETR112XT

(3) Install the top 112XT. Ensure that the ETR112XT rotating arm is properly secured by verifying that the spring-loaded locking pin at the pivot point is correctly seated.

(4) Select angle and secure top locking pins on both sides for the upper 112XT (do not attach middle locking pins for the CPL112XT)

(5) With middle locking pins unattached, the CPL112XT is free to rotate, facilitating installation of the lower 112XT

(6) Lower 112XT installed

(7) Attach lower locking pins on both sides of the lower 112XT to facilitate angling of the CPL112XT

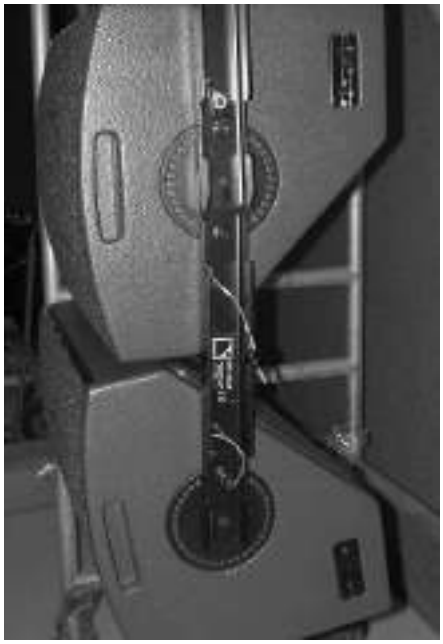

(8) Attach lower locking pins on both sides of the lower 112XT to facilitate angling of the CPL112XT

(9) Release lower locking pins to perform final angling of the lower 112XT once CPL112XT angle has been set and middle locking pins installed

(10) The final installed system. Side flytrack sections and PION2 accessories can be used for installation of safety security steels

Figure 34: CPL112XT, CPL115XT coupling adapter installation procedure

5.3 XTLIFTBAR ATTACHMENT

The optional XTLIFTBAR accessory allows for single point rigging of 112XT, 115XT or 115XT HiQ loudspeaker enclosures with 5 pick points available for tilt adjustment. Pick point holes (from front to back) provide tilt angles of +14, +7, 0, -7 or -14 degrees.

(1) XTLIFTBAR and the 112XT enclosure

(2) The XTLIFTBAR mounting stud mates with 112XT or 115XT pole mount sockets (top or bottom)

(3) When installing XTLIFTBAR, ensure that the main section is aligned with the center of the enclosure in order to properly balance the center of gravity. The flytrack section and PION2 (optional accessory) can be used to install a safety steel.

(4) Two locking pins are used to secure the XTLIFTBAR. Changing the shackle location provides tilt angles of +14, +7, 0, -7, -14 degrees (front to back).

Figure 35: XTLIFTBAR installation procedure

5.4 SAFETY RULES

Always ensure that the ETR112XT or ETR115XT rotating arm is securely fastened by verifying that the spring-loaded locking pin at the pivot point is correctly seated before adjusting the tilt angle of the 112XT, 115XT or 115XT HiQ.

When using ETR112XT or ETR115XT in the vertical orientation, always install the U-bracket with the fixed arm on the bottom and the pivoting arm on top.

Maximum two 112XT enclosures can be rigged using ETR112XT in conjunction with CPL112XT.

Maximum two 115XT enclosures can be rigged using ETR115XT in conjunction with CPL115XT.

Maximum two 115XT HiQ enclosures can be rigged using ETR115XT in conjunction with CPL115XT.

Maximum one 112XT or 115XT can be rigged per XT liftbar.

L-ACOUSTICS recommends the use of safety steels at all times. The recessed, side-mounted fly track sections can be used with the PION2 double stud fitting to ring accessory for safety attachment to 112XT and 115XT enclosures.

6. XT SYSTEM OPERATION

Connect program signal lines (L/R outputs from a mixing console, for example) to the A and B channel inputs of the digital signal processor.

With reference to the output channel assignments given in the Preset Description sheets (see Figures 11-16), connect the outputs of the DSP unit to the corresponding amplifier inputs (directly or via your signal distribution / return snake multicore system).

For 6 channel units (XTA DP226 and BSS 366) outputs 1, 2, 3 correspond to Sub, XT low, XT high for input A while output channels 4, 5, 6 correspond to Sub, XT low, XT high for input B.

Power up the DSP unit and select the appropriate preset for 2-way operation (FRONT, FILL or MONITOR) or 3-way operation (3W or 3WX for 112XT or 115XT plus SB115, SB118, SB218, dV-SUB subwoofers).

Perform the following steps as a system check:

1) turn down the level of all amplifier channels before turning the amplifiers on

2) un-mute the HIGH crossover channel

3) send a pink noise signal to the crossover

4) turn up the level of each HIGH amplifier channel individually and check that this provides the expected frequency band in the expected loudspeaker component. Test each HIGH amplifier channel individually until all HIGH amplifier channels have been tested.

5) mute the HIGH crossover channel

6) repeat steps 2-5 for LOW and SUB channels

7) turn off the pink noise

Set all amplifier output levels to 0 dB gain

Un-mute all crossover output channels and the system is ready for use.

Remember the old saying: "amps on last, amps off first" in order to avoid component damage due to power on/off transients.

6.1 RECOMMENDED MAINTENANCE PROCEDURES

a) HF diaphragm replacement

To access the HF compression driver diaphragm, the front grille of the XT enclosure should be removed and the entire 12" or 15" coaxial assembly de-mounted.

To remove the front grille, lift the edges of the acoustic foam and remove the screws. Screws can be found where the edges of the foam are not glued onto the grille (there is no need to completely remove the acoustic foam in order to remove the loudspeaker grille).

Once the coaxial assembly has been de-mounted, unscrew the back cover of the rear-mounted compression driver assembly to obtain access to the compression driver diaphragm.

Remove the damaged diaphragm and before installing the replacement diaphragm ensure that the voice coil gap is free from any metallic particles, dirt or other debris by using 2-sided tape and acetone, if necessary, to thoroughly clean out the gap.

After installing the replacement diaphragm, apply a low level, low frequency sine wave sweep (for example: 4 volts from 100 Hz - 1 kHz) to ensure that the diaphragm is properly centered in the gap before reinstalling the compression driver back cover. Make sure all compression driver diaphragm and back cover mount screws are securely fastened (loctite is optional but recommended).

As a final check apply a high level sine sweep over the HF compression driver's operating bandwidth (for example: 13 volts from 1 kHz to 18 kHz).

Re-mount the entire XT coaxial assembly in its enclosure and perform a system polarity check.

Following service, the damaged compression driver diaphragm should be returned to your distributor or directly to L-ACOUSTICS for warranty examination.

b) LF Service

The 12" or 15" loudspeaker components of the coaxial assemblies used in the 112XT, 115XT and 115XT HiQ are not field-serviceable. For field service, the entire coaxial assembly should be removed and replaced.

To remove the front grille, lift the edges of the acoustic foam and remove the screws. Screws can be found where the edges of the foam are not glued onto the grille - there is no need to completely remove the acoustic foam in order to remove the loudspeaker grille.

The damaged loudspeaker should be returned to your distributor or directly to L-ACOUSTICS for warranty examination and reconing.

c) Polarity Check

Whenever a HF diaphragm or loudspeaker component is replaced, wiring polarity should be checked with a polarity checking device. Both LF and HF components should operate with positive polarity.

d) Periodic Check

The frequency response of the enclosure should be checked periodically to check for any deviations due to wear, shock or other damage. This should be done on an annual basis for systems not subjected to demanding use. For systems being used on a daily basis for sub hire or touring, enclosures should be checked every month (or even more frequently).

A frequency response check can be performed with a high resolution RTA (real time analyzer), or preferably using WINMLS, SMAART, SPECTRAFOO, TEF or MLSSA measurement systems. Refer to the on-axis amplitude/frequency response to determine if your XT enclosure is within specification. In addition, a response sweep using a sine wave generator is useful for checking for coil rubs, buzzes, air leaks or other undesirable mechanical vibrations as part of the periodic quality control procedure.

The mechanical attachment of both low frequency and high frequency loudspeakers should be checked periodically since mount screws can become loose after being submitted to intense, long duration mechanical vibrations. Similarly, it is a good idea to periodically check that the high frequency diagram and rear cover for the compression driver are solidly attached. The quality of the contacts and locking action of the Speakon connector should also be checked periodically.

6.2 SPARE PARTS

	112XT			**115 XT**
HP BC121	12" coaxial speaker 8 Ohms		HP BC151	15" coaxial speaker 8 Ohms
HS BC31	Diaphragm for 1,4" driver		HS BC32	Diaphragm for 1,4" driver
HS BC121	12" recone kit		HS BC151	15" recone kit
HR BC121	12" recone kit inc. labour		HR BC151	15" recone kit inc. labour
CM 112XT	Front foam		CM 115XT	Front foam
MC 112XTGRL	Front grill		MC 115XTGRL	Front grill
CD COLNEO	Neoprene glue 500ML		CD COLNEO	Neoprene glue 500ML

7. SPECIFICATIONS

7.1 112XT ELEMENT SPECIFICATIONS

Frequency Response

Frequency response:	65 – 18k Hz (± 3 dB)	(FRONT preset)
Usable bandwidth:	55 – 18k Hz (-10 dB)	

Sensitivity

LF	(2.83 Vrms at 1 m)	98.5 dB SPL	(65 – 1k Hz)
HF	(2.83 Vrms at 1 m)	106 dB SPL	(1 – 18 kHz)

Power Rating				**Amplification**	**Impedance**
(Long Term)				(recommended)	(nominal)
LF	48 Vrms	290 Wrms	1160 Wpeak	580 W	8 ohms
HF	33 Vrms	135 Wrms	540 Wpeak	540 W	8 ohms

Nominal Directivity (-6 dB)

Axi-symmetrical	90° (± 20°)

System Output	**SPL**		
One enclosure	122 dB (cont)	128 dB (peak)	FRONT preset
	124 dB (cont)	130 dB (peak)	FILL preset
	125 dB (cont)	131 dB (peak)	3W preset

FRONT preset provides 3 dB low and high frequency contours under freefield conditions
FILL preset provides nominally flat response under freefield conditions
3W preset applies a 100 Hz high pass filter.

Components

LF 1 x 12" weather resistant loudspeaker (3" voice coil)
HF 1 x 1.4" exit compression driver (titanium diaphragm, 3" voice coil, coaxial assembly)

Enclosure

Height	540 mm	21.3 in
Front Width	410 mm	16.1 in
Rear Width	165 mm	6.5 in
Depth	375 mm	14.8 in
Trap Angle	45 degrees with respect to vertical	
Net Weight	27 kg	59.5 lbs
Shipping Weight	30 kg	66.1 lbs
Shipping Dimensions	615 x 470 x 465 mm	
	24.2 x 18.5 x 18.3 in	
Connectors	2x 4-pin Neutrik speakon	
Material	18 mm, 30 mm Baltic birch plywood	
	(sealed, screwed and rabbeted angles)	
Finish	Maroon-gray™	
Grill	Black epoxy perforated steel with acoustically transparent foam	
Rigging	Integrated flying hardware, handles and pole mount socket	

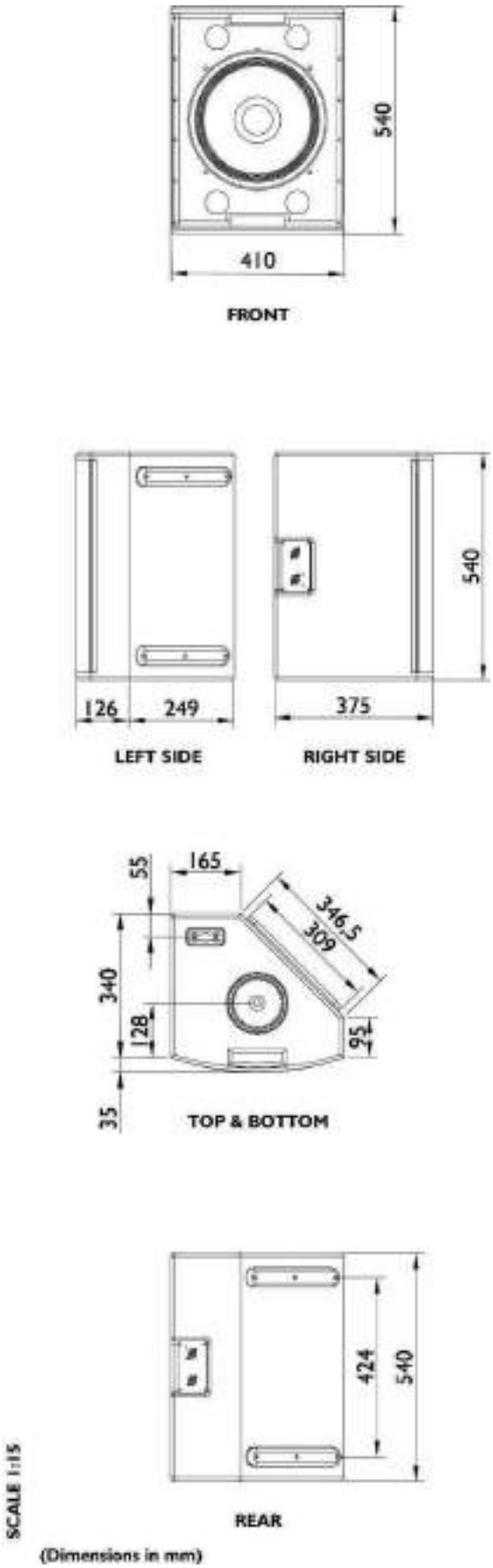

Figure 36: 112XT Line Drawing

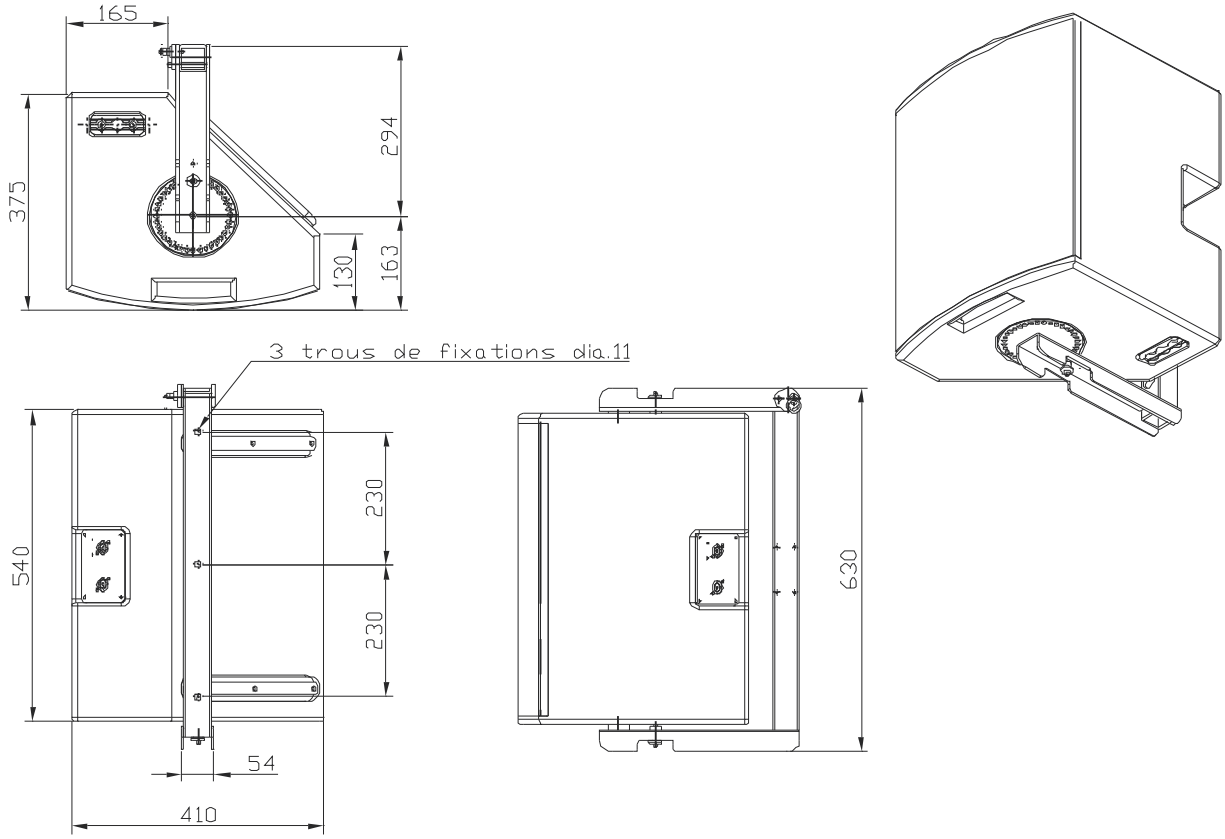

Figure 37: 112XT + ETR112XT Line Drawing

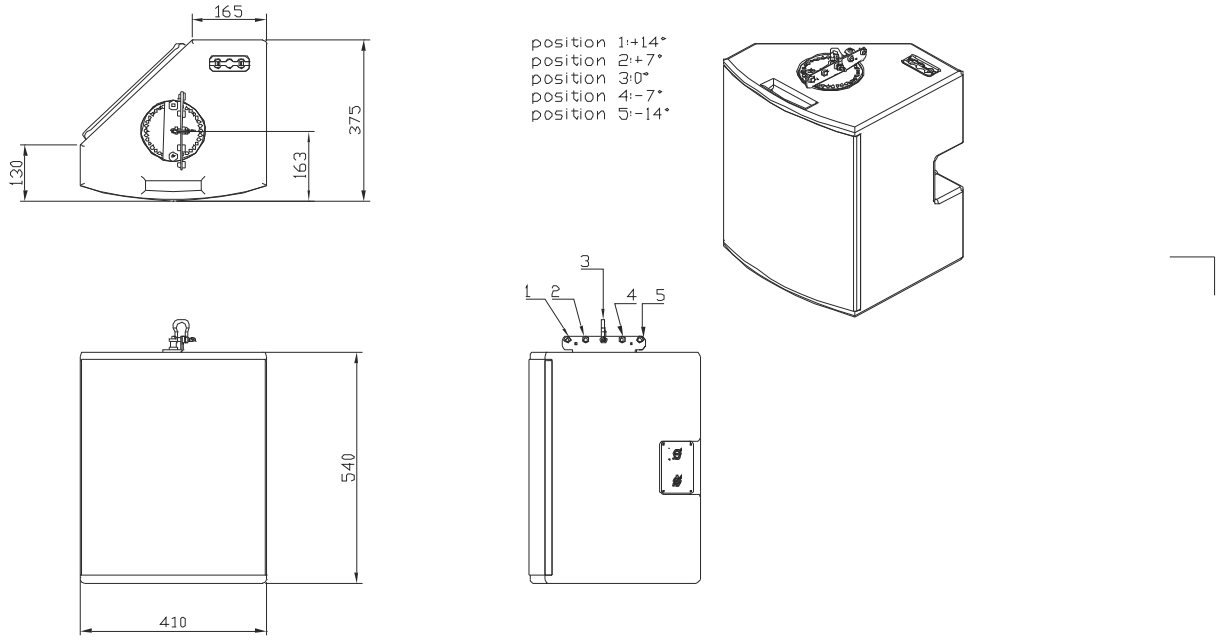

Figure 38: 112XT + XTLIFTBAR Line Drawing

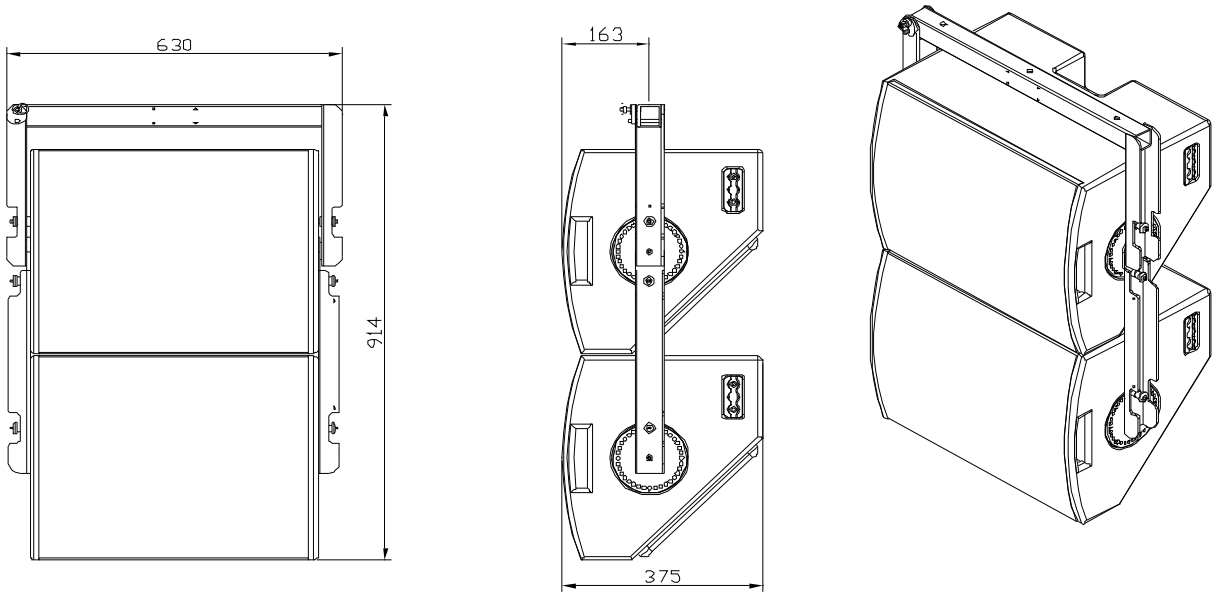

Figure 39: 112XT + ETR112XT + 112CPLXT Line Drawing (0 degree)

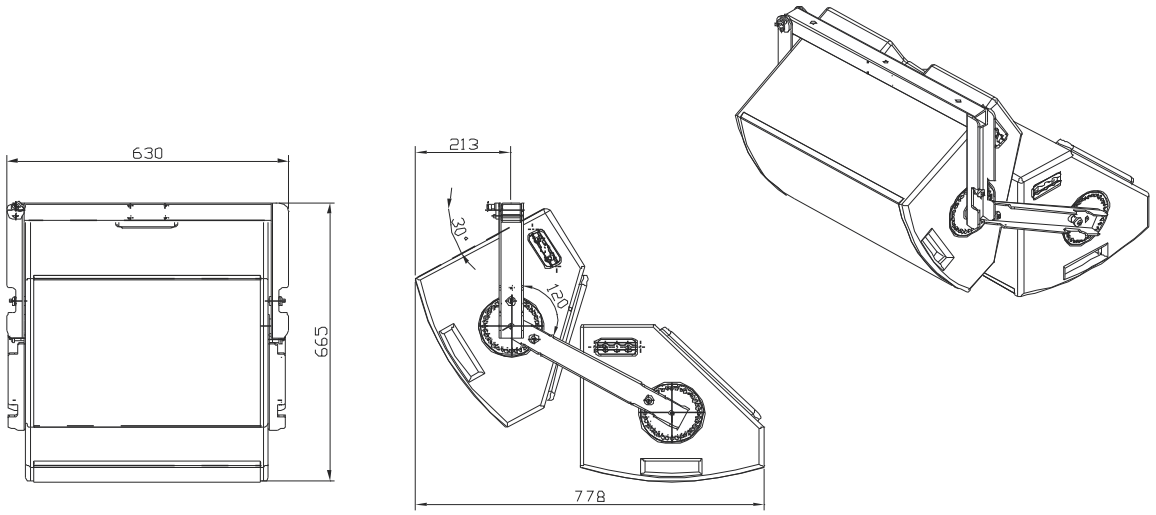

Figure 40: 112XT + ETR112XT + 112CPLXT Line Drawing (30 degrees)

7.2 115XT ELEMENT SPECIFICATIONS

Frequency Response

Frequency response:	60 – 18k Hz (± 3 dB)	(FRONT preset)
Usable bandwidth:	50 – 18k Hz (-10 dB)	

Sensitivity

LF	(2.83 Vrms at 1 m)	98 dB SPL	(60 – 1k Hz)
HF	(2.83 Vrms at 1 m)	108 dB SPL	(1 – 18 kHz)

Power Rating				**Amplification**	**Impedance**
(Long Term)				(recommended)	(nominal)
LF	45 Vrms	250 Wrms	1000 Wpeak	500 W	8 ohms
HF	26 Vrms	85 Wrms	350 W peak	350 W	8 ohms

Nominal Directivity (-6 dB)

Axi-symmetrical	80° (± 20°)

System Output	**SPL**		
One enclosure	122 dB (cont)	128 dB (peak)	FRONT preset
	124 dB (cont)	130 dB (peak)	FILL preset
	126 dB (cont)	132 dB (peak)	3W preset

FRONT preset provides 3 dB low and high frequency contours under freefield conditions
FILL preset provides nominally flat response under freefield conditions
3W preset applies a 100 Hz high pass filter.

Components

LF	1 x 15” weather resistant loudspeaker (3” voice coil)
HF	1 x 1.4” exit compression driver (titanium diaphragm, 3” voice coil, coaxial assembly)

Enclosure

Height	580 mm	22.8 in
Front Width	440 mm	17.3 in
Rear Width	167 mm	6.6 in
Depth	475 mm	18.7 in
Trap Angle	41 degrees with respect to vertical	
Net Weight	29.5 kg	65 lbs
Shipping Weight	33.2 kg	73.2 lbs
Shipping Dimensions	655 x 500 x 570 mm	
	25.8 x 19.7 x 22.4 in	
Connectors	2x 4-pin Neutrik speakon	
Material	18 mm, 30 mm Baltic birch plywood	
	(sealed, screwed and rabbeted angles)	
Finish	Maroon-gray™	
Grill	Black epoxy perforated steel with acoustically transparent foam	
Rigging	Integrated flying hardware, handles and pole mount socket	

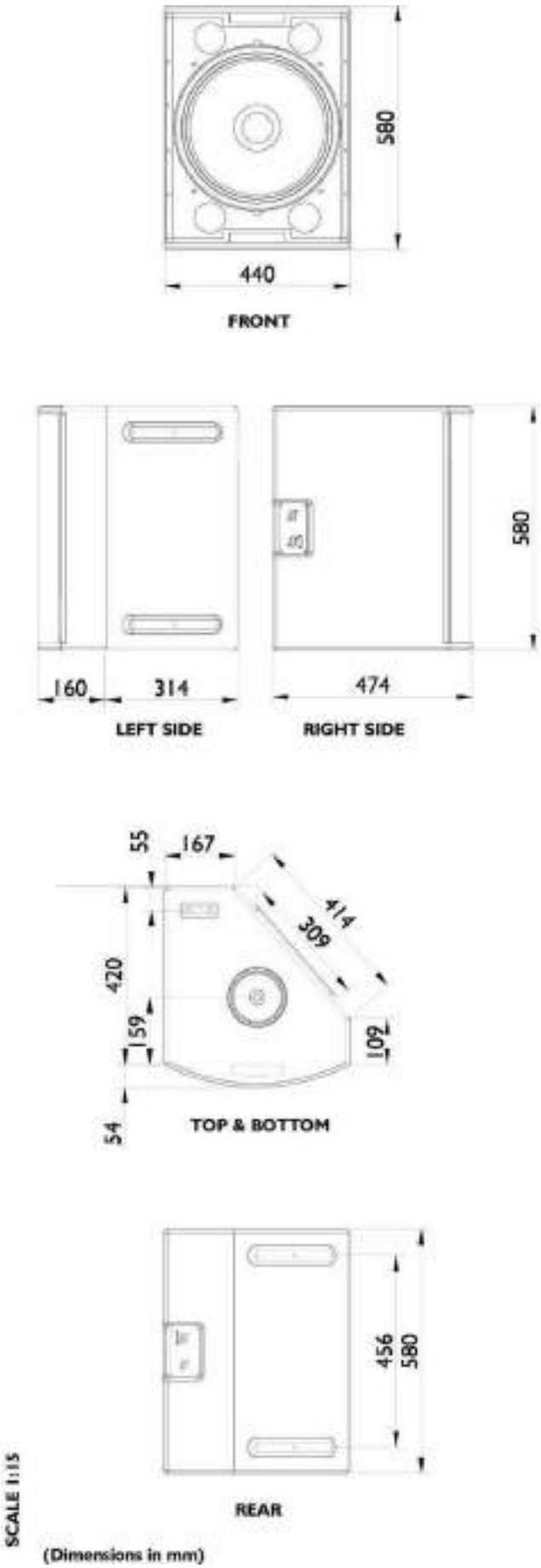

Figure 41: 115XT Line Drawing

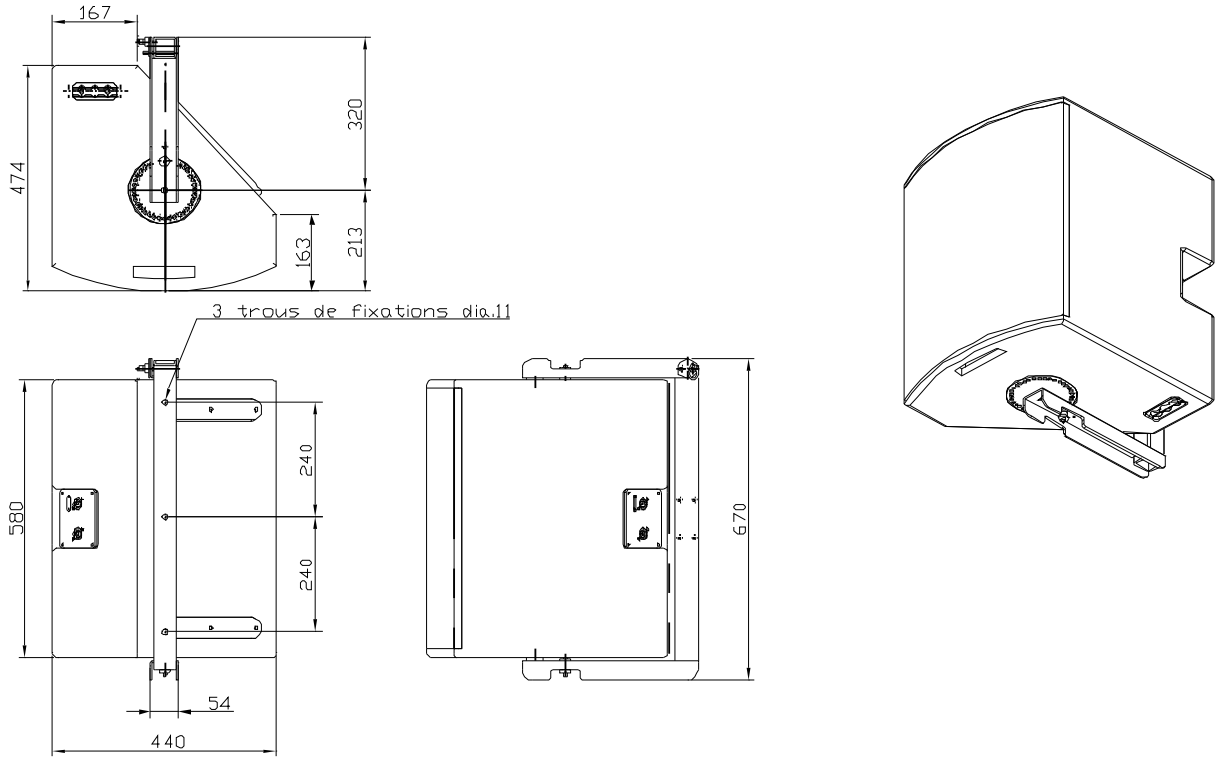

Figure 42: 115XT + ETR115XT Line Drawing

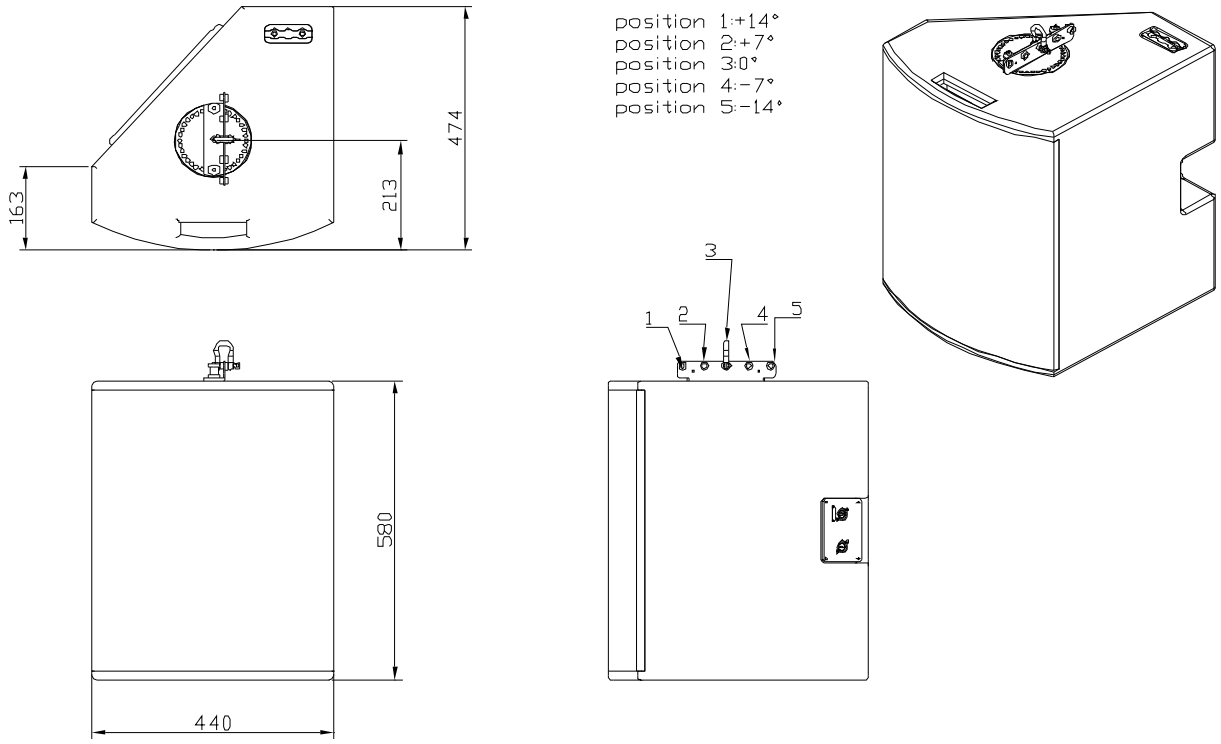

Figure 43: 115XT + XTLIFTBAR Line Drawing

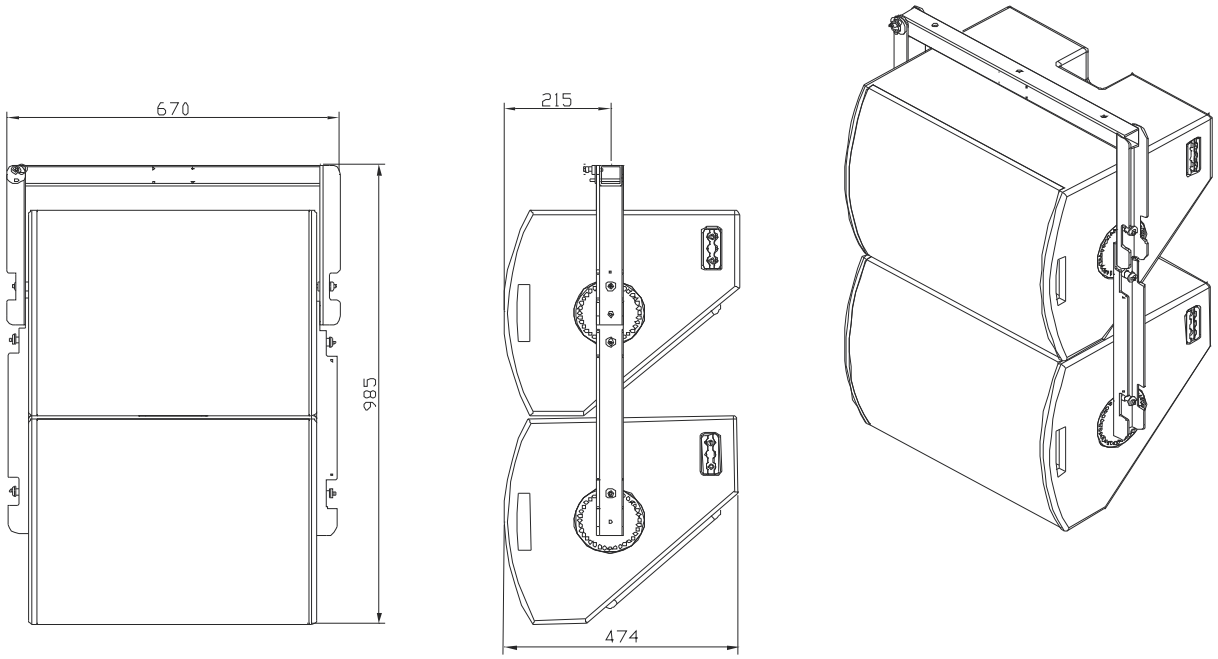

Figure 44: 115XT + ETR115XT + 115XTCPL Line Drawing (0 degrees)

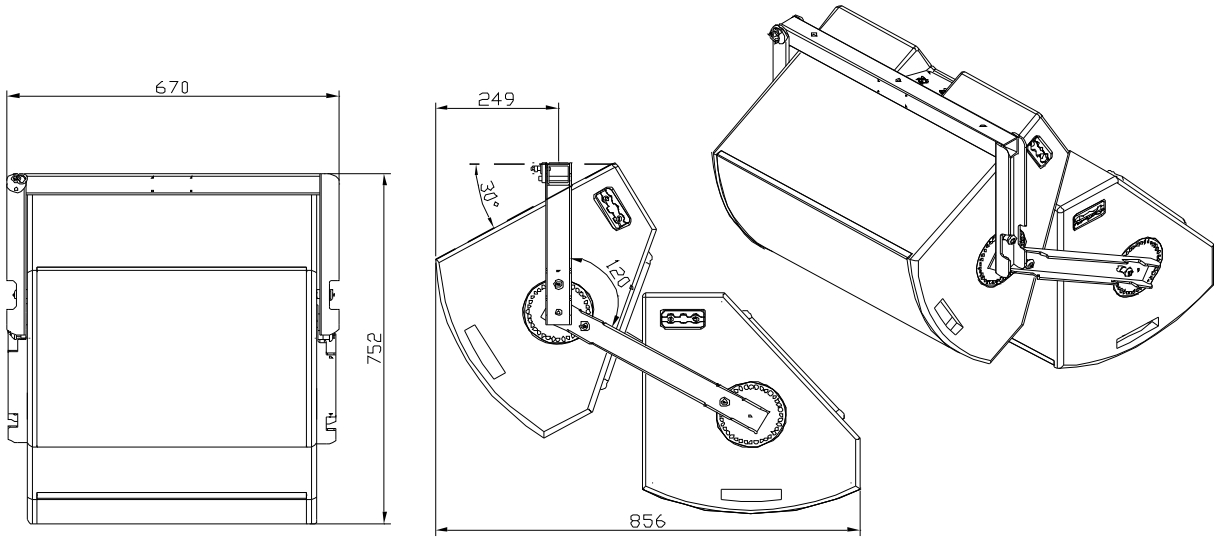

Figure 45: 115XT + ETR115XT + 115XTCPL Line Drawing (30 degrees)

7.3 115XT HIQ ELEMENT SPECIFICATIONS

Frequency Response

Frequency response:	65 – 18k Hz (± 3 dB)	(FRONT preset)
Usable bandwidth:	50 – 20k Hz (-10 dB)	

Sensitivity

LF	(2.83 Vrms at 1 m)	100.8 dB SPL	(65 – 1k Hz)
HF	(2.83 Vrms at 1 m)	110.2 dB SPL	(1 – 18 kHz)

Power Rating (Long Term)				**Amplification** (recommended)	**Impedance** (nominal)
LF	60 Vrms	450 Wrms	1800 Wpeak	900 W	8 ohms
HF	32 Vrms	125 Wrms	500 W peak	500 W	8 ohms

Nominal Directivity (-6 dB)

Axi-symmetrical	50° (± 10°)

System Output	**SPL**		
One enclosure	125 dB (cont)	131 dB (peak)	FRONT preset
	126.5 dB (cont)	132.5 dB (peak)	FILL preset
	129.5 dB (cont)	135.5 dB (peak)	MONITOR preset

FRONT preset provides 3 dB low and high frequency contours under freefield conditions
FILL preset provides nominally flat response under freefield conditions
MONITOR preset provides nominally flat response under halfspace conditions

Components

LF 1 x 15” weather resistant loudspeaker (3” voice coil)
HF 1 x 1.4” exit neodymium compression driver mounted on conical waveguide
(titanium diaphragm, 3” voice coil, coaxial assembly)

Enclosure

Height	365 mm 14.4 in
Width	580 mm 22.8 in
Depth	446 mm 17.6 in
Trap Angle	30 or 60 degrees with respect to vertical
Net Weight	28.5 kg 62.8 lbs
Shipping Weight	30 kg 62.8 lbs
Shipping Dimensions	650 x 550 x 500 mm 25.6 x 21.7 x 19.7 in
Connectors	2x 4-pin Neutrik speakon
Material	18 mm, 30 mm Baltic birch plywood (sealed, screwed and rabbeted angles)
Finish	Maroon-gray™
Grill	Black epoxy perforated steel with technically-advanced grille cloth
Rigging	Integrated flying hardware, handles and pole mount sockets

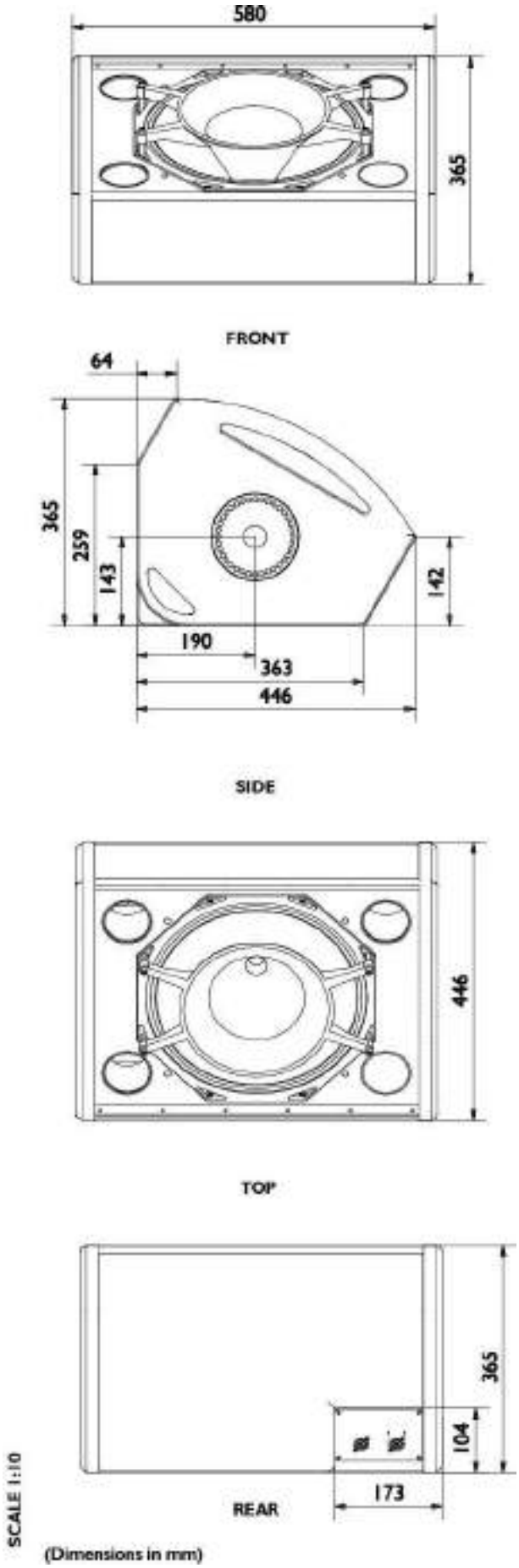

Figure 46: 115XT HiQ Line Drawing

DECLARATION OF CE CONFORMITY

For the product:

Catalog Item: 112XT

Description: L-ACOUSTICS® 112XT loudspeaker enclosure

Dimensions: 540 mm x 410 mm x 375 mm (H x W x D)

Material: Baltic birch plywood with external steel rigging plates

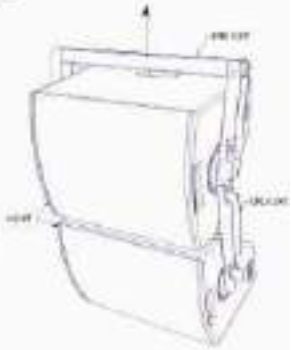

Optional accessories:
- Rigging accessory – ETRI12XT
- Rigging accessory – CPL112XT (2 pieces)
- Rigging accessory – XTLIFTBAR
- Rigging accessory – PION2

Product Origin

Country of origin of the product: France
Country of origin for components of the product: EEC

Technical Specifications :

The 112XT loudspeaker enclosure is intended for overhead suspension horizontally or vertically when using the ETRI12XT rigging accessory, or vertically when using the XTLIFTBAR rigging accessory. Up to 2 112XT loudspeakers can be suspended vertically (horizontal orientation) using 1 ETRI12XT and the CPL112XT.
The following chart indicates the safety factor when using the 112XT loudspeaker according to the conditions described in the L-ACOUSTICS XT LINE 112XT 115XT OPERATOR MANUAL Version 1.1 or later:

	112XT	ETRI12XT	CPL112XT	XTLIFTBAR
Weight	27 Kg / 60 lbs	5.25 Kg / 11.6 lbs	1.65 Kg / 3.6 lbs	0.55 Kg / 1.2 lbs
W.L.L.	30 daN / 67.5 lbf	56.5 daN / 127 lbf	13.5 daN / 30.4 lbf	30 daN / 67.5 lbf
Ultimate Strength Safety Factor	>12	>12	>12	>12

Standards conformity

112XT loudspeaker enclosures are designed to be suspended using the rigging accessory ETRI 12XT horizontally or vertically. The ETRI 12XT can be attached to an appropriate support using 1, 2 or all 3 of the 11 mm diameter holes on the main bracket.

2 x 112XT can be suspended vertically in the horizontal orientation from a single rigging point using one ETRI12XT and the CPL112XT.

1 x 112XT loudspeaker can be suspended in the vertical orientation using the XTLIFTBAR and a single rigging point.

The recessed, side-mounted fly track sections on the 112XT loudspeaker can be used with the PION2 double stud fixing to ring accessory for safety attachment to the 112XT. This secondary rigging point shall not be used as the main rigging point. One PION2 is capable of withstanding the weight of one 112XT with an ultimate safety factor of 12.

L-ACOUSTICS has engineered the 112XT and its rigging accessories using state of the art modeling and calculation software. The ETRI12XT, the CPL112XT and the XTLIFTBAR rigging accessory were also destructively tested to validate the final design using a pulling bench equipped with laboratory calibrated measuring cells.

L-ACOUSTICS hereby declares that the above products conform to :
1. **The Machinery Directive 98/37/CE**, Part 4 : Lifting Accessories
2. **Low Voltage Directive 73/23/CE** (harmonized standard EN60065).

Established at Marcoussis, France, on the 19th of February, 2004

Signature of L-ACOUSTICS representative :

Jacques Spillmann
Chief Engineer - Manufacturing

DECLARATION OF CE CONFORMITY

For the product:

Catalog Item: 115XT

Description: L-ACOUSTICS® 115XT loudspeaker enclosure

Dimensions: 580 mm x 440 mm x 474 mm (H x W x D)

Material: Baltic birch plywood with external steel rigging plates

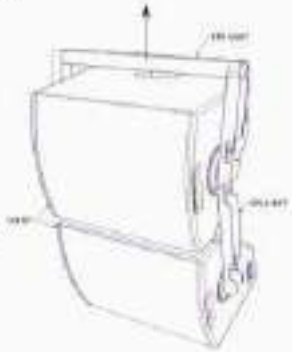

Optional accessories:
- Rigging accessory – ETRI115XT
- Rigging accessory – CPL115XT (2 pieces)
- Rigging accessory – XTLIFTBAR
- Rigging accessory – PION2

Product Origin

Country of origin of the product: France
Country of origin for components of the product: EEC

Technical Specifications:

The 115XT loudspeaker enclosure is intended for overhead suspension horizontally or vertically when using the ETRI 15XT rigging accessory, or vertically when using the XTLIFTBAR rigging accessory. Up to 2 115XT loudspeakers can be suspended vertically (horizontal orientation) using 1 ETRI 15XT and the CPL115XT.
The following chart indicates the safety factor when using the 115XT loudspeaker according to the conditions described in the L-ACOUSTICS XT LINE 112XT 115XT OPERATOR MANUAL Version 1.1 or later:

	115XT	ETRI115XT	CPL115XT	XTLIFTBAR
Weight	29.5 Kg / 65 lbm	5.5 Kg / 12 lbm	1.75 Kg / 3.9 lbm	0.55 Kg / 1.2 lbm
WLL	32.5 daN / 73 lbf	61.5 daN / 138 lbf	14.5 daN / 33 lbf	30 daN / 67.5 lbf
Ultimate Strength Safety Factor	> 12	> 12	> 12	> 12

Standards conformity

115XT loudspeaker enclosures are designed to be suspended using the rigging accessory ETRI115XT horizontally or vertically. The ETRI115XT can be attached to an appropriate support using 1, 2 or all 3 of the 11 mm diameter holes on the main bracket.

2 x 115XT can be suspended vertically in the horizontal orientation from a single rigging point using one ETRI115XT and the CPL115XT.

1 x 115XT loudspeaker can be suspended in the vertical orientation using the XTLIFTBAR and a single rigging point.

The recessed, side-mounted fly track sections on the 115XT loudspeaker can be used with the PION2 double stud fitting to ring accessory for safety attachment to the 115XT. This secondary rigging point shall not be used as the main rigging point. One PION2 is capable of withstanding the weight of one 115XT with an ultimate safety factor of 12.

L-ACOUSTICS has engineered the 115XT and its rigging accessories using state of the art modelling and calculation software. The ETRI 15XT, the CPL115XT and the XTLIFTBAR rigging accessory were also destructively tested to validate the final design using a pulling bench equipped with laboratory calibrated measuring cells.

L-ACOUSTICS hereby declares that the above products conform to:
1. **The Machinery Directive 98/37/CE**, Part 4: Lifting Accessories
2. **Low Voltage Directive 73/23/CE** (harmonized standard EN60065).

Established at Marcoussis, France, on the 19th of February, 2004

Signature of L-ACOUSTICS representative:

Jacques Spillmann
Chief Engineer - Manufacturing

DECLARATION OF CE CONFORMITY

For the product:

Catalog Item: 115XT HiQ

Description: L-ACOUSTICS® 115XT HiQ loudspeaker enclosure

Dimensions: 580 mm x 265 mm x 446 mm (W x H x D)

Material: Baltic birch plywood with external steel rigging plates

Optional accessories:
- Rigging accessory – ETRI115XT
- Rigging accessory – CPL115XT (2 pieces)
- Rigging accessory – XTLIFTBAR

Product Origin

Country of origin of the product: France
Country of origin for components of the product: EEC

Technical Specifications:

The 115XT HiQ loudspeaker enclosure is intended for overhead suspension horizontally or vertically when using the ETRI115XT rigging accessory, or vertically when using the XTLIFTBAR rigging accessory. Up to 2 x 115XT HiQ loudspeakers can be suspended vertically (horizontal orientation) using 1 x ETRI115XT and the CPL115XT.

The following chart indicates the safety factor when using the 115XT loudspeaker according to the conditions described in the L-ACOUSTICS XT LINE 112XT 115XT OPERATOR MANUAL Version 7.1 or later:

	115XT HiQ	ETRI115XT	CPL115XT	XTLIFTBAR
Weight	28.5 Kg / 63 lbs	5.5 Kg / 12 lbs	1.75 Kg / 3.9 lbs	0.55 Kg / 1.2 lbs
WLL	32 daN / 72 lbf	61.5 daN / 138 lbf	14.5 daN / 33 lbf	30 daN / 67.5 lbf
Ultimate Strength Safety Factor	>12	>12	>12	>12

L-ACOUSTICS

[illegible]

Standards conformity

115XT HiQ loudspeaker enclosures are designed to be suspended using the rigging accessory ETRI115XT horizontally or vertically. The ETRI115XT can be attached to an appropriate support using 1, 2 or all 3 of the 11 mm diameter holes on the main bracket.

2 x 115XT HiQ can be suspended vertically in the horizontal orientation from a single rigging point using one ETRI115XT and the CPL115XT.

1 x 115XT HiQ loudspeaker can be suspended in the vertical orientation using the XTLIFTBAR and a single rigging point.

L-ACOUSTICS has engineered the 115XT HiQ and its rigging accessories using state of the art modeling and calculation software. The ETRI115XT, the CPL115XT and the XTLIFTBAR rigging accessory were also destructively tested to validate the final design using a pulling bench equipped with laboratory calibrated measuring cells.

L-ACOUSTICS hereby declares that the above products conform to:
1. **The Machinery Directive 98/37/CE**, Part 4: Lifting Accessories
2. **Low Voltage Directive 73/23/CE** (harmonized standard EN60065).

Established at Marcoussis, France, on the 9th of June, 2004

Signature of L-ACOUSTICS representative:

Jacques Spillmann
Chief Engineer - Manufacturing